Clutch

Removal and renewal of the clutch plate

WARNING

Disconnect the lead from the battery negative terminal (–) and apply the parking brake.

Insert a suitable dowel into the centre hole of the clutch assembly.

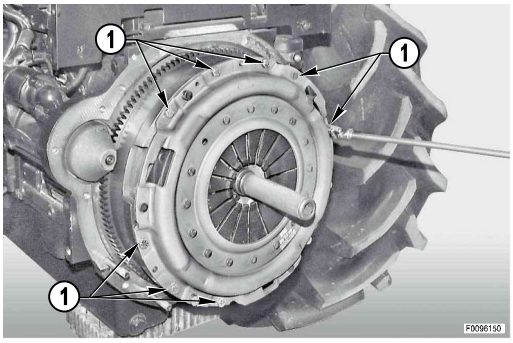

1.

Remove screws (1) and remove the complete clutch assembly (2).

IMPORTANT

Loosen the screws gradually in a crosswise and alternate sequence.

Remove clutch plate (3).

IMPORTANT

Note that the clutch plate is installed with the smooth side facing the clutch unit and the grooved side facing the flywheel.

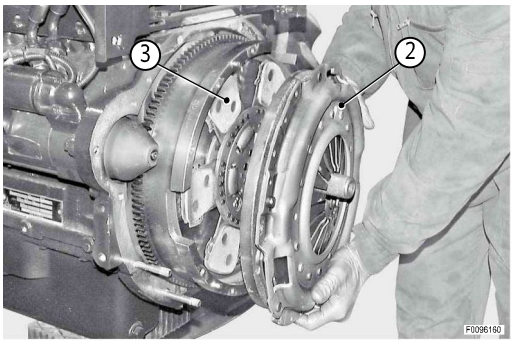

2.

Check the clutch plate for wear.

Check that the thickness of the clutch plate is within the prescribed tolerance limits and there is no sign of glazing.

Clutch plate thickness "S" (flat plate version P/N 0.007.7928.3/10):

- normal measurement: 8.5±0.4 mm
- limit measurement: 5.5±0.4 mm

Clutch plate thickness "S" (6-pad plate version P/N 0.014.1112.3):

- normal measurement: 10.7±0.4 mm
- limit measurement: 7.7±0.4 mm

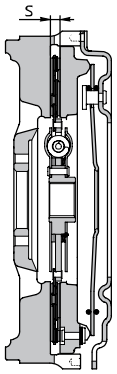

3.

Installation of the clutch plate

Refitting is the reverse of removal.

Release bearing

Renewal

1. Withdraw sleeve assembly (1).

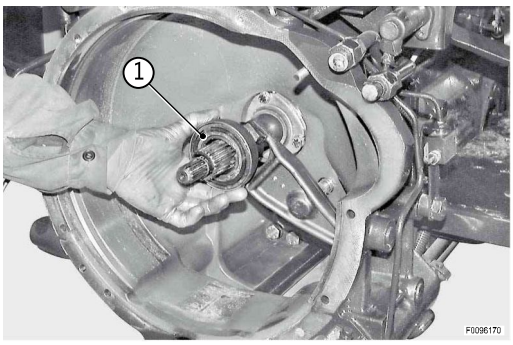

2. Position the sleeve assembly under a press and, using a suitable tool, separate thrust bearing (2) from hub (1).

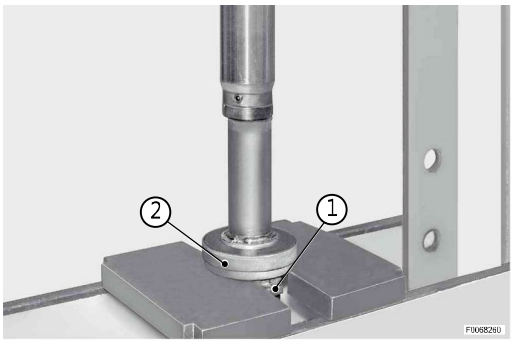

3. Fit thrust bearing (2) on sleeve (1).

> **IMPORTANT**
>
> Take care to install bearing (2) the right way round.

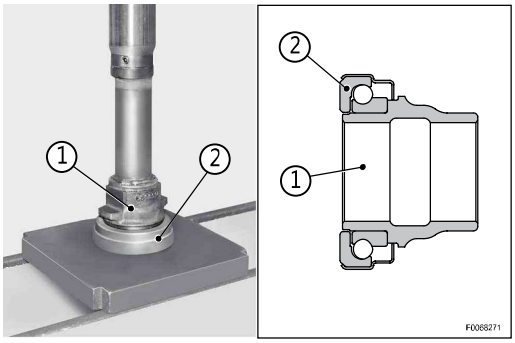

4. Grease hub (1) and install it on guide sleeve (3), making sure that it is installed the right way round in relation to release fork (4).

   - Sleeve: Molikote

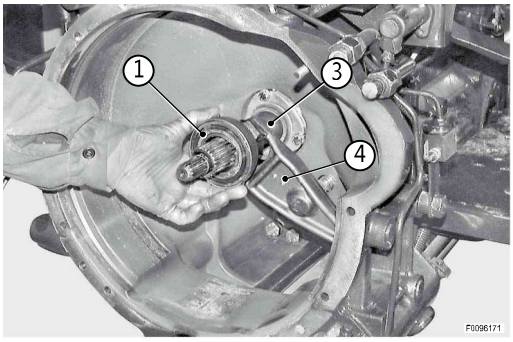

Disassembly of the parking brake

Removal

1. **WARNING**

   Disconnect the battery's negative terminal lead (–)

   Drain off all the oil from the transmission.

   - Transmission oil: max. 70 litres (18.5 US.gall.)

2. **For 4WD versions**

   Remove the 4WD engagement control device.

   For all versions

   Remove circlip (1)

   IMPORTANT

   Mark the relative positions of lever (2) and cam (3).

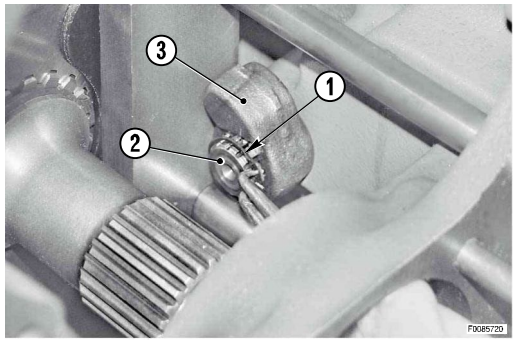

3. Withdraw lever (2) and remove cam (3).

   IMPORTANT

   Check the condition of O-ring (4) and renew it if necessary.

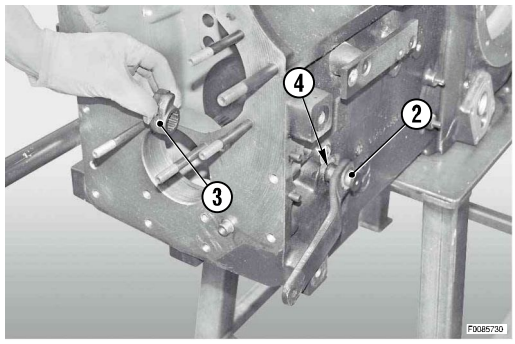

4. Using a slide hammer puller, remove pin (5).

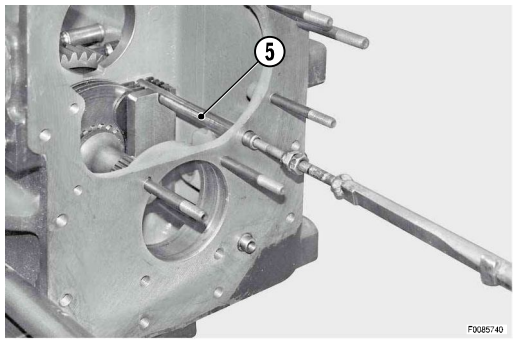

5. Remove reaction plate (6) and friction shoe (7).

BUY NOW

PayPal VISA MasterCard DISCOVER AMERICAN EXPRESS

Download the full PDF manual instantly.

Our customer service e-mail:

aservicemanualpdf@yahoo.com