SERVICE MANUAL

T1560 / T1570

Compact Tractors

Print No. 84205613A

NEW HOLLAND
AGRICULTURE

SECTION 00 - GENERAL INFORMATION

Chapter 1 - General Information

CONTENTS

Section	Description	Page
	Introduction	2
	International Symbols	4
	Specifications	5
	General Dimensions	10
	Minimum Hardware Tightening Torques	12
	Metric Bolt Torque Specifications	13
	Lubricants	14
	Adjustments	15

INTRODUCTION

This repair manual provides the technical information needed to properly service the New Holland T1560 and T1570 tractor. Use this manual in conjunction with the operator's manual for complete operation, adjustment, and maintenance information.

On New Holland equipment, left and right are determined by standing behind the unit, looking in the direction of travel.

PLEASE READ CAREFULLY:

A PRODUCT IDENTIFICATION PLATE is located on the *left-hand side of the transmission housing*. The numbers on the plate are important in the event your tractor should require future service. For your convenience, have your dealer record these numbers in the appropriate spaces below.

New Holland North America, Inc. is continually striving to improve its products. We reserve the right to change prices, specification, or equipment at any time without notice.

All data given in this book is subject to production variations. Dimensions and weights are approximate only, and the illustrations do not necessarily depict tractors in standard condition. For exact information about any particular tractor, please consult your New Holland dealer.

T1560 & T1570 ID PLATE LOCATION

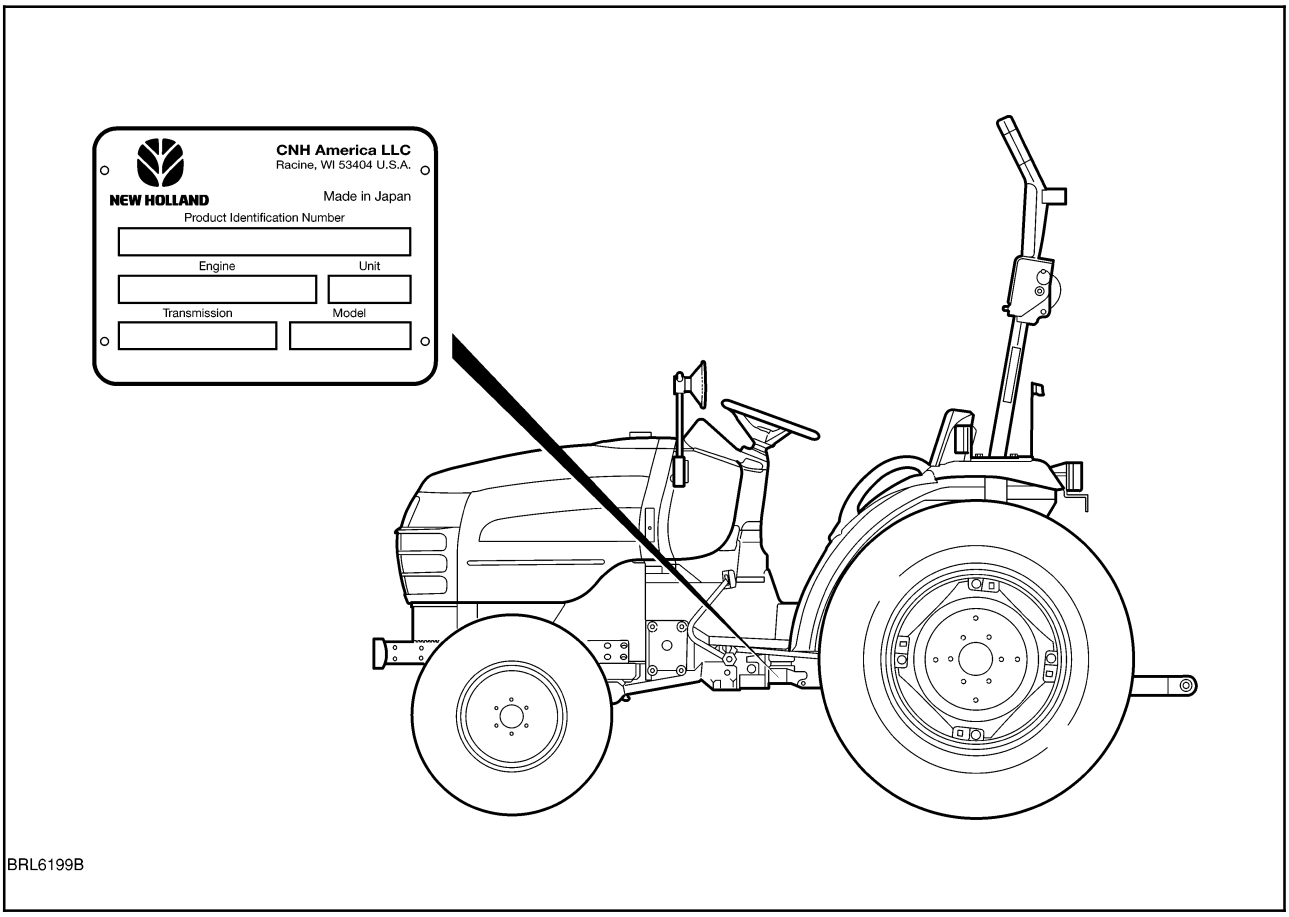

1

GENERAL DIMENSIONS FOR T1560 & T1570

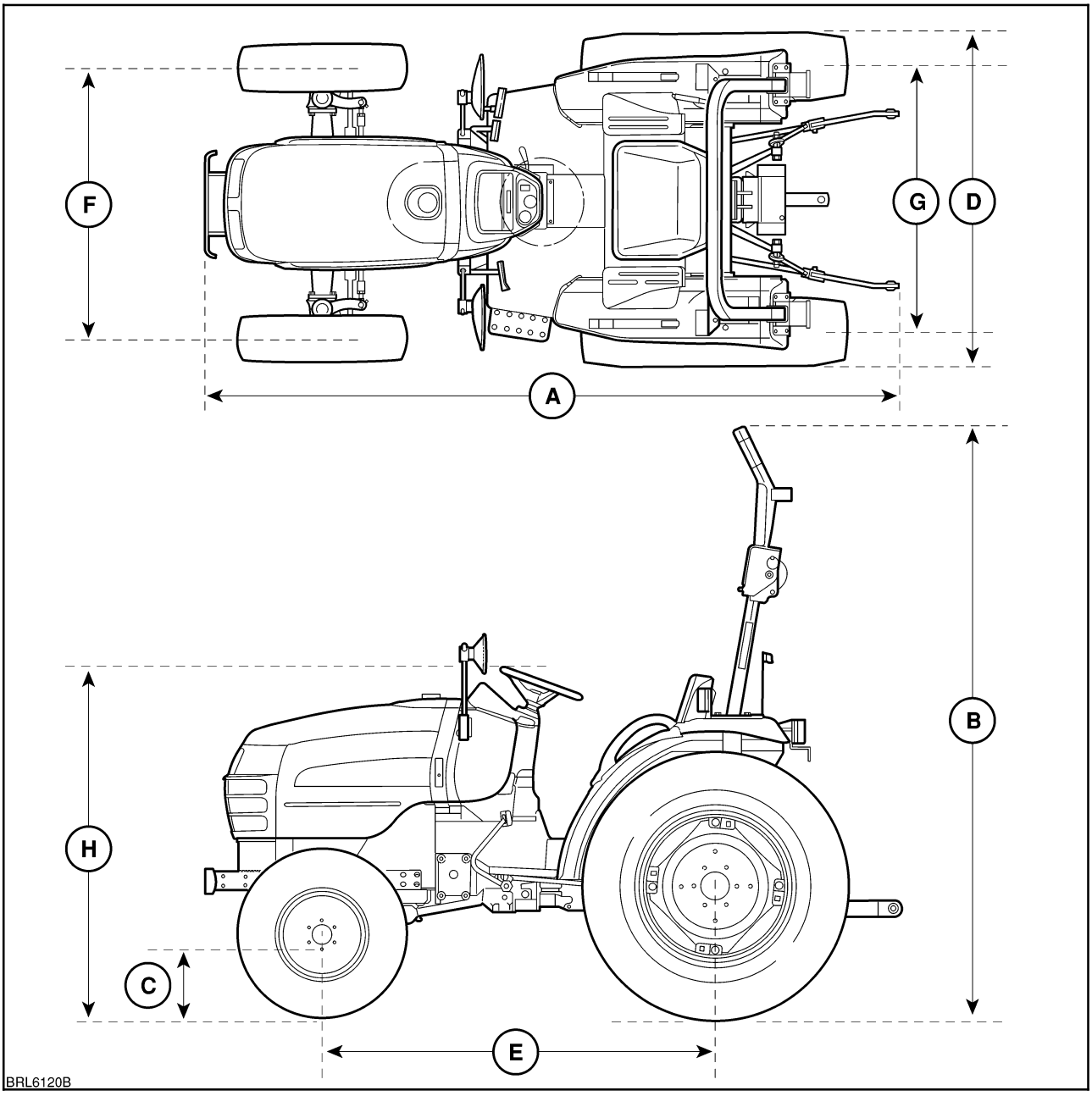

2

	Model T1560/T1570
(A)—LENGTH: (3 pt. Horizontal)	
4WD	
Turf Tyres	2825mm
Ag. Tyres	2825mm
(B)— TO TOP OF ROPS:	
Turf Tyres	2425mm
Ag. Tyres	2490mm
(C) - MINIMUM GROUND CLEARANCE:	
Turf Tyres	250mm
Ag. Tyres	310mm

GENERAL DIMENSIONS Contd:	Model T1560/T1570
(D)—WIDTH: REAR AXLE:	
Outside to Outside:	
Turf Tyres	1510mm (Narrow setting)
Ag. Tires	1387mm (Narrow setting)
(E)—WHEEL BASE:	
FWD	1600mm
(F)— FRONT WHEEL CENTRES:	
Turf Tyres	1100mm
Ag. Tires	1150mm
(G)— REAR WHEEL CENTRES:	
Turf Tyres	1390mm
Ag. Tyres	1500mm
(H)— HEIGHT TO TOP OF STEERING WHEEL:	
Turf Tyres	1350mm
Ag. Tyres	1415mm

WHEEL TREAD SETTINGS:

FRONT:	
Agricultural:	
FWD	
9x3 Transmission	1100mm
HST Transmission	1100mm
Turf:	
FWD	
9x3 Transmission	1150mm
HST Transmission	1150mm
REAR:	
Agricultural:	
FWD	
9x3 Transmission	1070mm
HST Transmission	1070mm
Turf:	
FWD	
9x3 Transmission	1120mm
HST Transmission	1120mm

WEIGHT:

With ROPS & Ag Tyres:

FWD	HST	9 x 3
Ag Tyres	1056 kg 2328 lbs	1050 kg 2315 lbs
Turf Tyres	1048 kg 2311 lbs	1042 kg 2298 lbs

SECTION 10 – ENGINE

Chapter 1 – Engine

CONTENTS

Section	Description	Page
	Specifications	5
	Cooling System	10
	Metric Bolt Torque Specifications	11
	Engine Bolt Torque Specifications	12
	Engine Fuel System Bolt Torque Specifications	12
	Special Tools	13
	Compression Test and Tools	13
	Description of Operation – Engine	14
	Cylinder Head and Valve Train Components	15
	Cylinder Block Assembly	15
	Troubleshooting	17
	Overhaul – Engine	22
	Engine	22
	Preparation	22
	Fuel Injector and Glow Plug	23
	Removal	23
	Oil Pressure Switch	23
	Removal	23
	Temperature Sending Switch and Alternator	24
	Removal	24
	Fan, Water Pump, and External Oil Tube	24
	Removal	24
	Head Cover	24
	Removal	24
	Rocker Arm Shaft and Support Bracket	25
	Removal	25
	Cylinder Head	25
	Removal	25
	Valve Tappet	26
	Removal	26
	Fuel Shutoff Solenoid	26
	Removal	26
	Timing Gear Cover	26
	Removal	26
	Timing Gears and Camshaft	28
	Removal	28
	Oil Sump	28
	Removal	28
	Oil Suction Pipe and Strainer	29
	Removal	29

Section	Description	Page
	Connecting Rods, Bearings, Pistons, and Rings	29
	Removal	29
	Flywheel	30
	Removal	30
	Backplate and Oil Seal	30
	Removal	30
	Crankshaft and Main Bearings	30
	Removal	30
	Cylinder Head	31
	Disassembly	31
	Inspection and Repair	31
	Valve Seats	32
	Inspection and Repair	32
	Valves	33
	Inspection and Repair	33
	Valve Guides	34
	Inspection and Repair	34
	Valve Springs	35
	Inspection and Replacement	35
	Rocker Arms	35
	Inspection and Replacement	35
	Push Rods	36
	Inspection and Replacement	36
	Cylinder Head	37
	Assembly	37
	Cylinder Block	37
	Inspection	37
	Pistons	38
	Disassembly and Inspection	38
	Piston Rings	40
	Disassembly and Inspection	40
	Connecting Rods	40
	Disassembly and Inspection	40
	Connecting Rod Bearing Oil Clearance Check	42
	Pistons, Rings, and Connecting Rod	43
	Assembly	43
	Main Bearing and Thrust Washer	44
	Removal and Inspection	44
	Crankshaft	44
	Inspection	44
	Crankshaft Bearing (Bushing)	45
	Inspection	45
	Replacement	46
	Main Bearing and Thrust Washer	46
	Assembly	46
	Port Block	48
	Removal	48
	Installation	48

Section	Description	Page
	Timing Gear	48
	Inspection	48
	Camshaft	49
	Disassembly	49
	Inspection	49
	Assembly	49
	Flywheel	50
	Inspection and Repair	50
	Timing Gear Housing	50
	Front Oil Seal and Steering Pump Seal	50
	Replacement	50
	Crankshaft and Bearing Holder	51
	Installation	51
	Rear Oil Seal and Backplate	51
	Installation	51
	Flywheel	52
	Installation	52
	Pistons and Connecting Rods	52
	Installation	52
	Oil Suction Pipe and Suction Strainer	53
	Installation	53
	Oil Sump	53
	Installation	53
	Camshaft and Camshaft Gear	53
	Installation	53
	Idler Gear, Oil Pump, and Injection Timing	54
	Installation	54
	Timing Gear Cover	54
	Installation	54
	Crankshaft Pulley	54
	Installation	54
	Fuel Injection Pump	55
	Installation	55
	Power Steering Pump	55
	Installation	55
	Head Gasket Selection	56
	Cylinder Head	56
	Assembly	56
	Valve Clearance Adjustment	57
	Head Cover	57
	Installation	57
	Water Pump and Cooling Fan	58
	Installation	58
	External Oil Tube	58
	Installation	58
	Glow Plug and Connector	58
	Installation	58

Section	Description	Page
	Fuel Injector	59
	Installation	59
	Fuel Piping	59
	Installation	59
	Alternator and Temperature Sender Switch	59
	Installation	59
	Exhaust Manifold	60
	Installation	60
	Description of Operation – Engine Lubrication System	60
	Oil Filter	63
	Construction and Function	63
	Maintenance	63
	Oil Pump	63
	Removal	63
	Inspection	63
	Installation and Adjustment	64
	Engine Oil Pressure Check	64
	Oil Pressure Relief Valve	66
	Removal	66
	Installation	66
	Oil Consumption	66
	Description of Operation – Cooling System	68
	Maintenance	68
	Coolant	68
	Radiator Cap	68
	Thermostat	69
	Water Pump	69
	Cooling Fan	69
	Overhaul – Cooling System	70
	Radiator	70
	Removal	70
	Inspection and Repair	71
	Installation	71
	Water Pump	73
	Removal	73
	Inspection and Repair	74
	Installation	74
	Thermostat	75
	Removal	75
	Inspection and Repair	76
	Installation	76
	Separating the Tractor	77
	Engine/Clutch Housing	77
	Removal	77
	Installation	79

SPECIFICATIONS

GENERAL	T1560	T1570
Gross Engine in Kw(Hp)	22.4 (30)	24.6 (33)
PTO in Kw(Hp) w/9 x 3 w/HST	 17.7 (23.7) 17.2 (23.1)	 26.0 (34.8) 19.0 (25.5)
Engine Model	N843	N843
Number of Cylinders	3	3
Bore x Stroke in mm	84 x 90	84 x 90
Displacement in Litres	1.496	1.496
Compression Ratio	22.2:1	22.2:1
Rated Speed in rpm	2800	2800
Muffler Location	Under Hood	Under Hood
Firing Order	1-2-3	1-2-3
Low Idle Speed in rpm	1000 – 1100	1000 – 1100
High Idle Speed in rpm	3000	3000
Cylinder Arrangement	In-line Vertical	In-line Vertical
Valve Arrangement	Overhead	Overhead
CYLINDER BLOCK		
Bore Standard in mm	84 - 84.019	84 - 84.019
Bore Maximum in mm	84.2	84.2
Head Surface Warp Standard in mm	0.05	0.05
Head Surface Warp Maximum in mm	0.12	0.12
CYLINDER HEAD		
Head Warp in mm Standard Maximum	 0.05 0.12	 0.05 0.12
Valve Seat Width in mm Standard Intake Exhaust Maximum	 1.66 - 1.87 1.66 – 1.73 2.5	 1.66 - 1.87 1.66 – 1.73 2.5
Valve Seat Face Angle	45°	45°
Valve Seat Sink in mm Standard Maximum	 0.85 - 1.15 1.8	 0.85 - 1.15 1.8

PISTON	T1560	T1570
Diameter in mm Standard Minimum	 83.948 - 83.963 83.7	 83.948 - 83.963 83.7
Bore Clearance in mm Standard Maximum	 0.038 - 0.072 0.25	 0.038 - 0.072 0.25
Piston Pin Bore in mm Standard Maximum	 27.999 - 28.005 (1.10231 - 1.1026) 28.02 (1.1031)	 27.999 - 28.005 (1.10231 - 1.1025) 28.02 (1.1031)
Piston Pin Clearances in mm (in.) Standard Maximum	 –0.001 +0.007 0.02	 –0.001 +0.007 0.02

PISTON PIN		
Diameter in mm Standard Maximum	 27.996 - 28.0 27.98	 27.996 - 28.0 27.98
Pin-to-Bushing Clearance in mm Standard Maximum	 0.01 - 0.025 0.08	 0.01 - 0.025 0.08
PISTON RING END GAP		
1st Compression in mm Standard Maximum	 0.2 - 0.35 1.0	 0.2 - 0.35 1.0
2nd Compression in mm Standard Maximum	 0.20 - 0.40 1.0	 0.20 - 0.40 1.0
Oil Ring in mm Standard Maximum	 0.20 - 0.40 1.0	 0.20 - 0.8 1.0

PISTON RING COMPRESSION RING TO GROOVE SIDE CLEARANCE	T1560	T1570
1st Compression in mm		
Standard	0.07 - 0.11	0.07 - 0.11
Maximum	0.25	0.25
2nd Compression in mm		
Standard	0.04 - 0.08	0.04 - 0.08
Maximum	0.25	0.25
Oil Ring in mm (in.)		
Standard	0.02 - 0.06	0.02 - 0.06
Maximum	0.15	0.15
PISTON RING WIDTH		
1st Compression in mm	2.0	2.0
2nd Compression in mm	1.5	1.5
Oil Ring in mm	4.0	4.0
CONNECTING ROD		
Rod Twist in mm		
Standard	< 0.08	< 0.08
Maximum	> 0.2	> 0.2
Rod Bend in mm		
Standard	< 0.05	< 0.05
Maximum	> 0.15	> 0.15
Rod Side Play in mm		
Standard	0.1 - 0.3	0.1 - 0.3
Maximum	0.7	0.7
Crankshaft Bearing Clearance in mm		
Standard	0.035 – 0.085	0.035 – 0.085
Maximum	0.2	0.2

CRANKSHAFT	T1560	T1570
Journal Diameter in mm		
Standard	67.957 - 67.97	67.957 - 67.97
Minimum	67.9	67.9
Crankpin Diameter in mm		
Standard	51.964 - 51.975	51.964 - 51.975
Minimum	51.9	51.9
Runout in mm		
Standard	< 0.03	< 0.03
Maximum	> 0.06	> 0.06
End Play in mm		
Standard	0.1 - 0.4	0.1 - 0.4
Minimum	0.5	0.5
Thrust Washer Thickness in mm		
Standard	2.95 - 3.0	2.95 - 3.0
Maximum	2.8	2.8

CAMSHAFT		
Cam Height - Valve mm		
Standard	34.441 – 34.5076	34.441 – 34.5076
Minimum	34.1	34.1
Bend in mm		
Standard	< 0.03	< 0.03
Maximum	> 0.1	> 0.1
Cam Height - Fuel mm		
Standard	42.99 – 43.01	42.99 – 43.01
Minimum	42.8	42.8
VALVES		
Stem Diameter - Intake in mm		
Standard	6.955 - 6.97	6.95 - 6.97
Minimum	6.89	6.89
Stem Diameter - Exhaust in mm		
Standard	6.94 - 6.955	6.94 - 6.955
Minimum	6.84	6.84
Guide Clearance - Intake in mm		
Standard	0.03 - 0.06	0.03 - 0.06
Maximum	> 0.2	> 0.2
Guide Clearance-Exhaust in mm		
Standard	0.05 - 0.075	0.05- 0.075
Maximum	> 0.25	> 0.25
Valve Margin in mm		
Standard	0.775 - 1.075	0.775 - 1.075
Allowable Limit	0.5	0.5

VALVES Contd;	T1560	T1570
Valve Clearance (Inlet/Exhaust) in mm	0.2	0.2
Valve Spring-Free Height in mm Standard Allowable Limit	 35 33.5	 35 33.5
Valve Spring-Sqareness in mm Standard Allowable Limit	 < 1.2 2.0	 < 1.2 2.0
Valve Spring-Compressed Height in mm Standard @ 8.1 kg Allowable Limit @ 7 kg	 30.4 30.4	 30.4 30.4
Valve Timing – Intake Open Before TDC Close After BDC	 13° 43°	 13° 43°
Valve Timing – Exhaust Open Before TDC Close After BDC	 43° 13°	 43° 13°
PUSH RODS		
Length in mm Diameter in mm	177.6–178.0 6.3	177.6–178.0 6.3
ROCKER ARM		
Shaft Diameter in mm Allowable Limit	14.95 – 14.97 14.87	14.95 – 14.97 14.87
Shaft to Rocker Clearance in mm Standard Allowable Limit	 0.032 - 0.068 0.2	 0.032 - 0.068 0.2
LUBRICATION SYSTEM		
Relief Valve - Opening Pressure in Bar	2.4 - 3.4	2.4 - 3.4
Rotor to Vane Clearance in mm Standard Allowable Limit	 0.1 – 0.15 0.25	 0.1 – 0.15 0.25
Rotor to Cover Clearance in mm Standard Allowable Limit	 0.1 – 0.15 0.2	 0.1 – 0.15 0.2

COOLING SYSTEM

Type of System	Pressurized liquid w/recirculating by-pass
Water Pump:	
Type	Centrifugal
Drive	V-belt
Belt Deflection (tension)	5 to 10mm when 5 kg is applied midway between pulleys
Fan Diameter	340 mm
Thermostat:	T1560/T1570
Starts to Open	82°C
Fully Open	95°C
Radiator Cap Pressure	
Rating	0.9 bar (13 psi)
Coolant	Ethylene glycol and water in a 50/50 mixture
Capacity	5.0 Litres

OVERHAUL - ENGINE

ENGINE

Preparation

1. Disconnect the battery leads (1) and battery hold down bracket (2) to remove the battery.
2. Remove tractor hood and side panels.

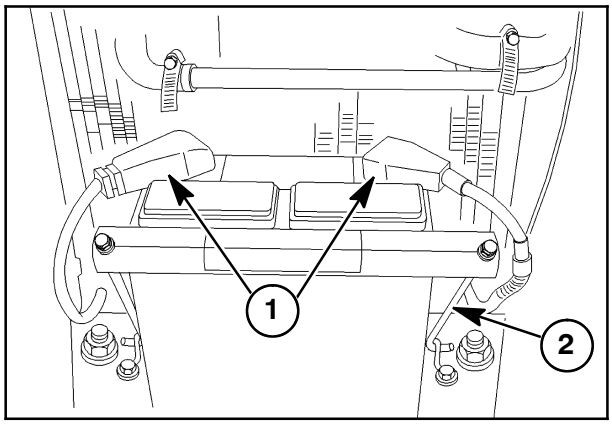

5

3. Turn coolant tap bolt (1) counterclockwise to drain fluid. Remove the radiator assembly. See “Radiator Removal”, discussed later in this section.

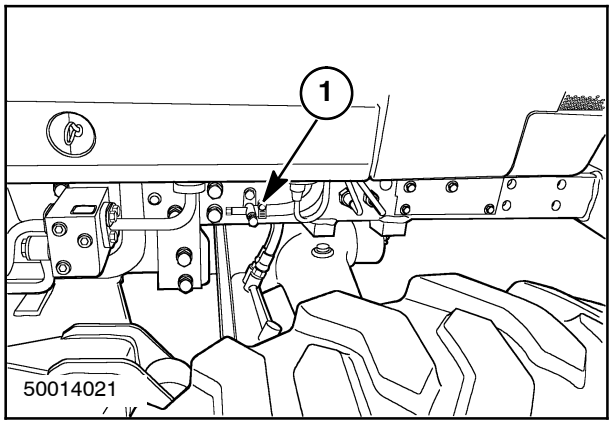

6

4. Remove the air cleaner assembly (1) along with the air cleaner hoses.

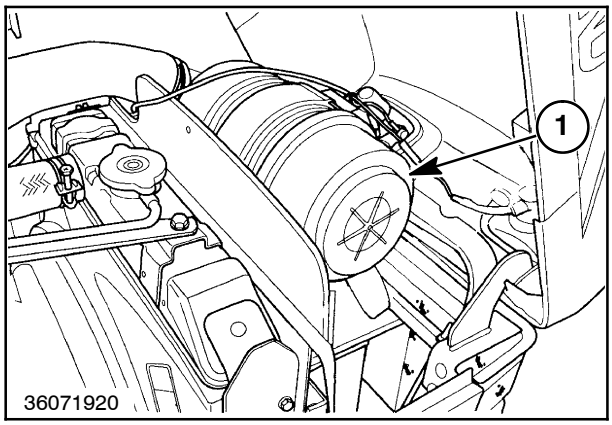

7

WARNING

Exhaust components may be extremely hot. Let components cool before removing.

5. Remove the exhaust muffler (1) and tailpipe assembly.

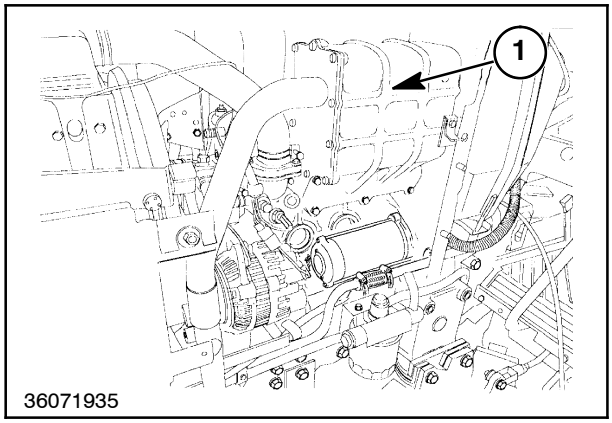

8

FUEL INJECTOR AND GLOW PLUG

Removal

1. Clean all dirt and oil from the injectors and surrounding areas.
2. Disconnect the fuel lines (1) from the injectors and cap all openings.
3. Remove the injector fuel leak-off line (2).
4. Remove the injector assemblies (3).
5. Remove the glow plug bus connector (4) and remove the glow plugs (5).

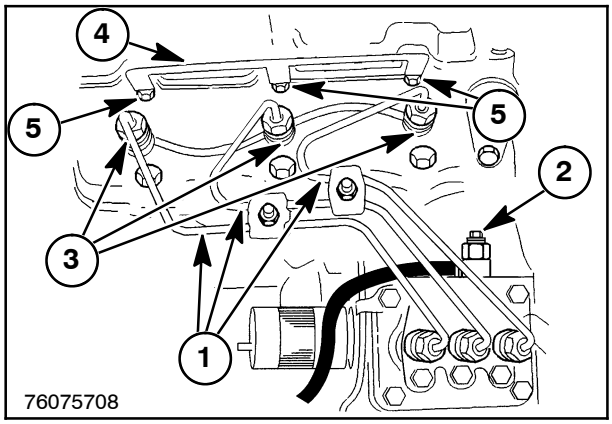

9

OIL PRESSURE SWITCH

Removal

Remove the oil pressure switch (1).

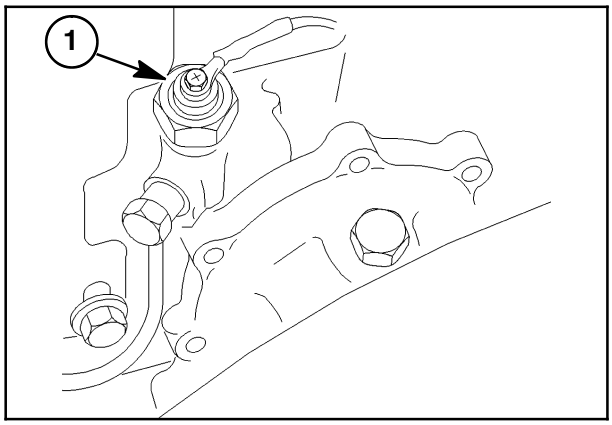

10

TEMPERATURE SENDING SWITCH AND ALTERNATOR

Removal

1. Remove the temperature sending switch (1) from the front of the cylinder head.
2. Loosen the alternator mounting bolts (2) and remove the V-belt (3) from the drive pulley.
3. Disconnect the alternator wires from the back of alternator (4).
4. Remove the alternator mounting bolts (2) and remove the alternator.

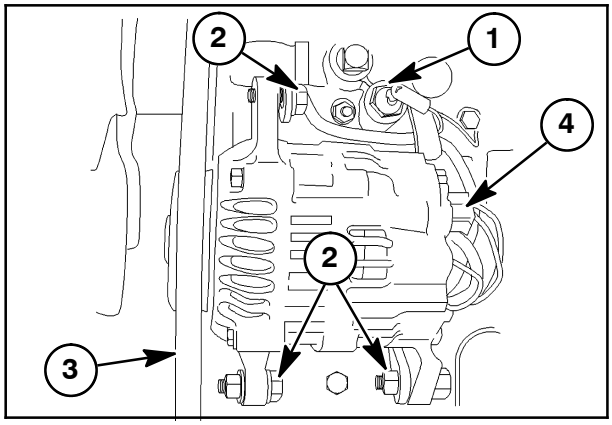

11

FAN, WATER PUMP, AND EXTERNAL OIL TUBE

Removal

1. Remove the fan and water pump assembly. See “Fan Removal” and “Water Pump Removal” discussed later in this section.
2. Remove the external oil transfer tube banjo bolt (1) from the front of the cylinder head.

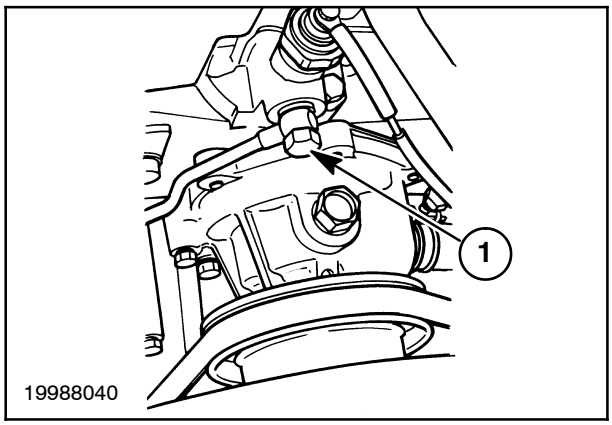

12

HEAD COVER

Removal

Remove the retaining bolts (1) cap nuts (2) and seal washers (3) and remove the head cover (4) with gasket (5).

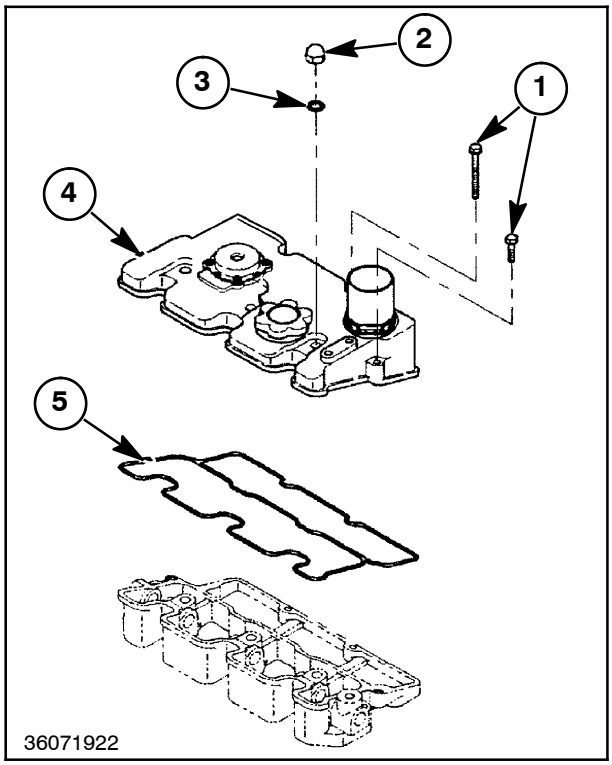

13

ROCKER ARM SHAFT AND SUPPORT BRACKET

Removal

Remove the bolts (1) and nuts (2) remove the rocker arm shaft and support bracket as an assembly (3) and gasket (4).

NOTE: *Alternately loosen the rocker support bolts a turn at a time to prevent distorting the rocker shaft.*

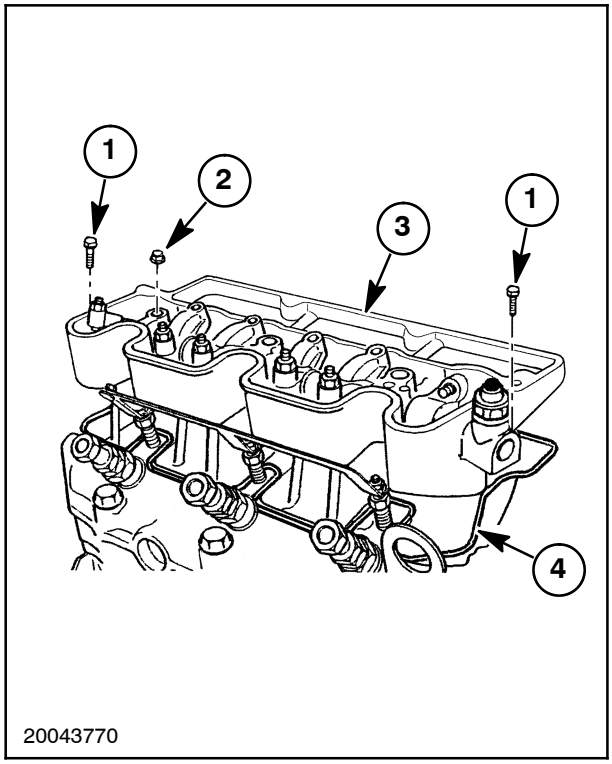

14

CYLINDER HEAD

Removal

NOTE: *Keep all valve components in separately marked containers for re-assembly in their original location*

1. Remove the valve stem caps (1) and push rods (2).
2. To remove the cylinder head, remove the cylinder head bolts (3) by alternately loosening a half turn at a time to prevent warping the head.

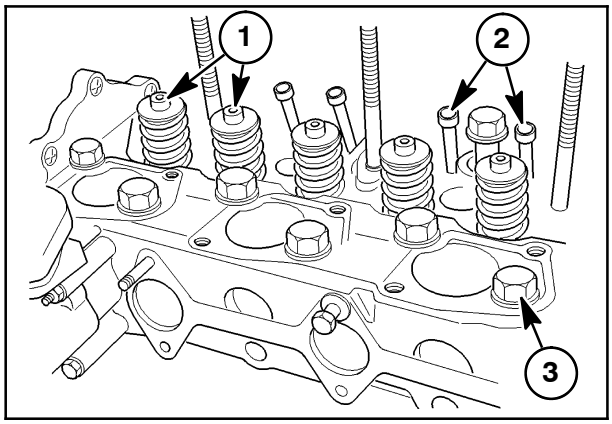

15

BUY NOW

PayPal VISA MasterCard DISCOVER AMERICAN EXPRESS

Download the full PDF manual instantly.

Our customer service e-mail:

aservicemanualpdf@yahoo.com