Final Drive Carriers, Hubs and Brakes - Disassemble - Front Axle

SMCS - 4054-015; 4092-015; 4253-015; 4255-015

Disassembly Procedure

Table 1

Required Tools			
Tool	**Part Number**	**Part Description**	**Qty**
A	1P-1863	Retaining Ring Pliers	1
B	6V-9508	Face Seal Plug	1
	6V-9829	Cap As	1
	1P-0510	Driver Gp	2
	5F-7345	Screw	1
C	267-6564	Spanner	1
D	1U-5832	Pry Bar	1
E	1U-6410	Three Jaw Puller	1
F	1P-0510	Driver Gp	1
G	5P-4197	Spacer	1
H	1A-1935	Full Nut	1
	3H-0465	Push-Puller Plate	4
	5F-7342	Adapter	2
	5F-7343	Bearing Puller Gp	1

	5F-7366	Forcing Screw	1
	5P-8248	Hard Washer	2
	6B-6684	Full Nut	2
	6V-8237	Washer	1
	8B-7549	Puller Leg	2
	9S-7338	Crossblock	1

Start By:

a. Remove the front tires and rims. Refer to Disassembly and Assembly, "Tire and Rim - Remove".

b. Release the hydraulic system pressure. Refer to Disassembly and Assembly, "Hydraulic System Pressure - Release".

NOTICE

Care must be taken to ensure that fluids are contained during performance of inspection, maintenance, testing, adjusting, and repair of the product. Be prepared to collect the fluid with suitable containers before opening any compartment or disassembling any component containing fluids.

Refer to Special Publication, NENG2500, "Dealer Service Tool Catalog" for tools and supplies suitable to collect and contain fluids on Cat products.

Dispose of all fluids according to local regulations and mandates.

---

1. Drain the oil from the front final drives into a suitable container.

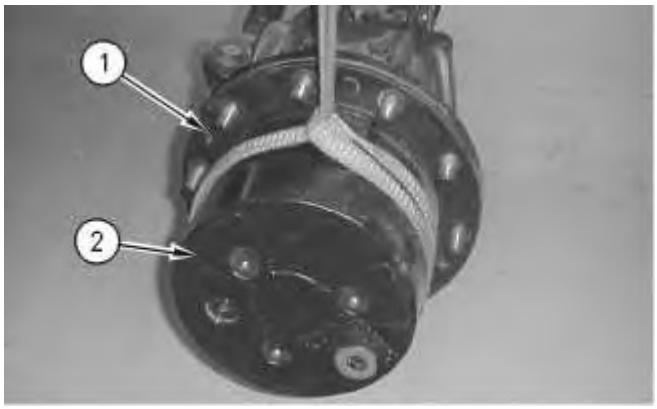

Illustration 1 g00894123

2. Attach a suitable lifting device to carrier housing (2).

3. Remove bolts (1).

4. Remove carrier housing (2). The weight of carrier housing (2) is approximately 31 kg (68 lb).

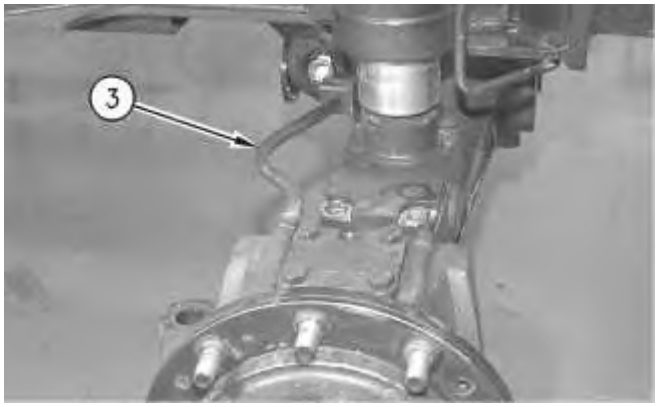

Illustration 2 g00894124

5. Disconnect hose assembly (3).

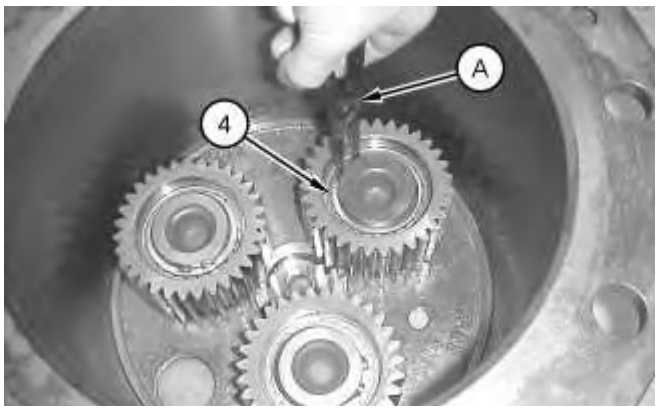

Illustration 3 g01136274

6. Use Tooling (A) in order to remove retaining rings (4).

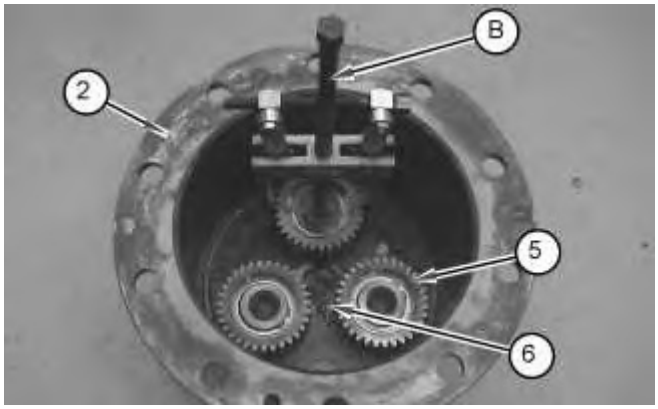

Illustration 4 g01136278

7. Use Tooling (B) in order to remove planetary gears (5) from carrier housing (2).
8. Remove thrust washer (6).

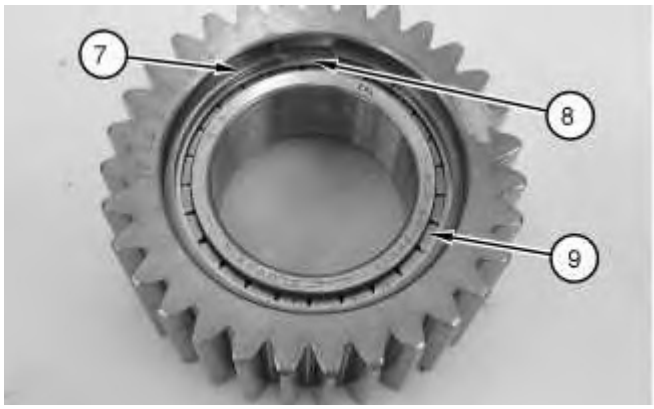

Illustration 5 g01136281

9. Remove retaining ring (7), washer (8), and roller bearing (9).

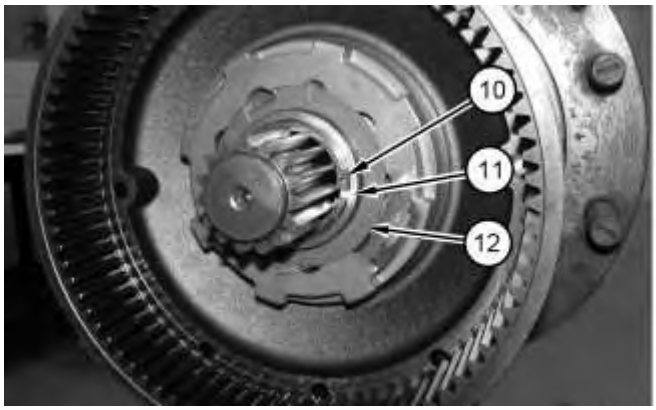

Illustration 6 g01136284

10. Use Tooling (A) in order to remove retaining ring (10). Remove thrust washers (11) and (12).

Illustration 7 g01183274

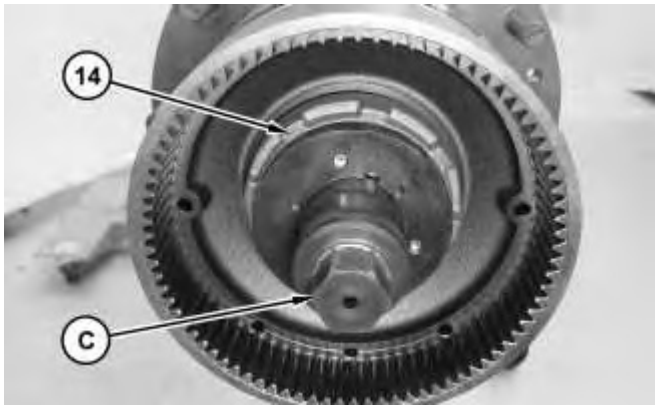

Illustration 8 g01183275

11. Remove bolt (13). Use Tooling (C) in order to remove nut (14).

Illustration 9 g01136294

12. Remove O-ring seal (15). Remove ring gear housing (16).

Illustration 10 g01136296

WARNING

Personal injury can result from being struck by parts propelled by a released spring force.

Make sure to wear all necessary protective equipment.

Follow the recommended procedure and use all recommended tooling to release the spring force.

13. Remove bolts (17), the springs, and the retainers. Remove piston (18).

Illustration 11 g01136302

14. Remove O-ring seal (19), ring (20), O-ring seal (21), and ring (22).

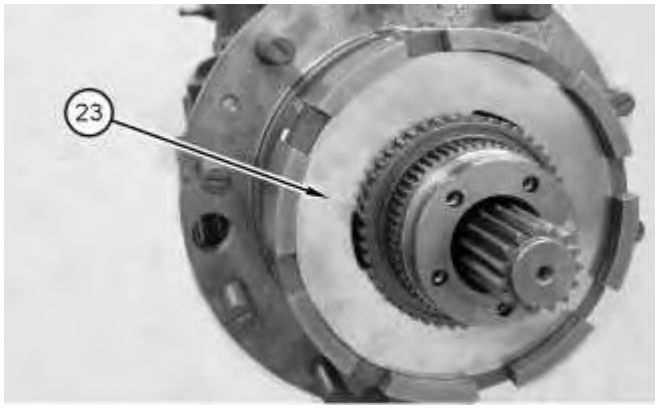

Illustration 12 g01136306

15. Remove clutch discs (23).

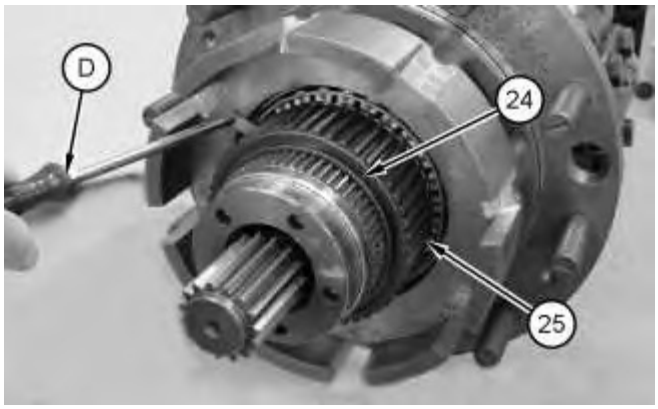

Illustration 13 g01136310

16. Remove O-ring seal (24). Use Tooling (D) in order to remove carrier gear (25).

Illustration 14 g01136323

17. Remove O-ring seal (26).

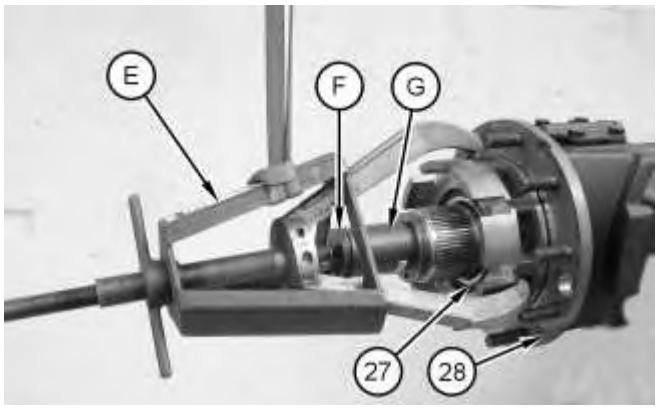

Illustration 15 g01136328

18. Use a suitable lifting device, Tooling (E), Tooling (F), and Tooling (G) in order to remove bearing cone (27) and flange (28).

Illustration 16 g01136332

19. Attach a suitable lifting device to flange (28) and remove flange (28). The weight of flange (28) is approximately 38 kg (83 lb).

Illustration 17 g01136334

20. Remove seal (29). Remove bearing cups (30).

Illustration 18 g01136337

21. Remove spacer (31).

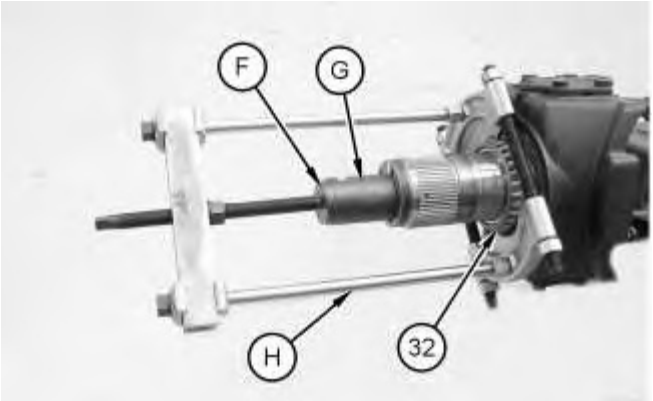

Illustration 19 g01136345

22. Use Tooling (F), Tooling (G), and Tooling (H) in order to remove bearing cone (32).

Final Drive Carriers, Hubs and Brakes - Disassemble - Rear Axle

SMCS - 4054-015; 4092-015; 4253-015; 4255-015

Disassembly Procedure

Table 1

Required Tools			
Tool	**Part Number**	**Part Description**	**Qty**
A	1P-1863	Retaining Ring Pliers	1
B	1P-0510	Driver Gp	2
	5F-7345	Screw	1
C	267-6564	Spanner	1
D	1U-5832	Pry Bar	1
E	1U-6410	Three Jaw Puller	1
F	1P-0510	Driver Gp	1
G	1A-1935	Full Nut	1
	3H-0465	Push-Puller Plate	4
	5F-7342	Adapter	2
	5F-7343	Bearing Puller Gp	1
	5F-7366	Forcing Screw	1
	5P-8248	Hard Washer	2
	6B-6684	Full Nut	2

	6V-8237	Washer	1
	8B-7549	Puller Leg	2
	9S-7338	Crossblock	1

Start By:

a. Remove the rear tires and rims. Refer to Disassembly and Assembly, "Tire and Rim - Remove".

b. Release the hydraulic system pressure. Refer to Disassembly and Assembly, "Hydraulic System Pressure - Release".

NOTICE

Care must be taken to ensure that fluids are contained during performance of inspection, maintenance, testing, adjusting, and repair of the product. Be prepared to collect the fluid with suitable containers before opening any compartment or disassembling any component containing fluids.

Refer to Special Publication, NENG2500, "Dealer Service Tool Catalog" for tools and supplies suitable to collect and contain fluids on Cat products.

Dispose of all fluids according to local regulations and mandates.

---

1. Drain the oil from the front final drives into a suitable container.

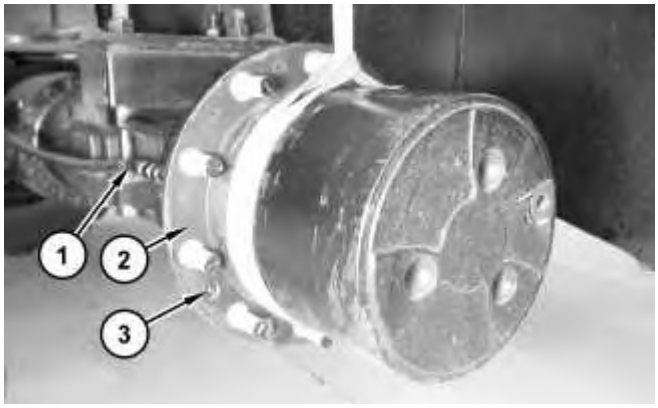

Illustration 1 g01178408

2. Attach a suitable lifting device to carrier housing (2).

3. Remove bolts (3).

4. Remove carrier housing (2). The weight of carrier housing (2) is approximately 31 kg (68 lb).

5. Disconnect hose assembly (1).

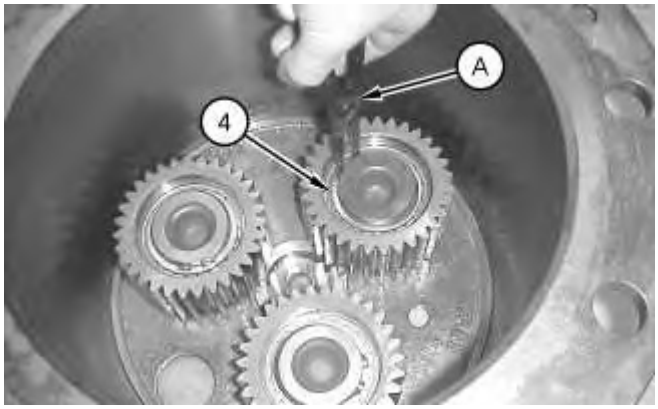

Illustration 2 g01136274

6. Use Tooling (A) in order to remove retaining rings (4).

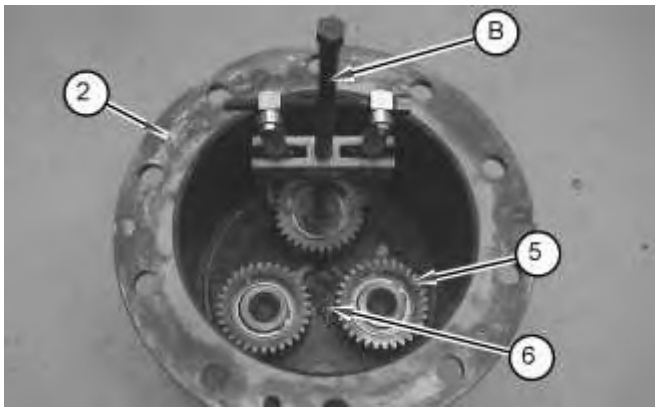

Illustration 3 g01136278

7. Use Tooling (B) in order to remove planetary gears (5) from carrier housing (2).

8. Remove thrust washer (6).

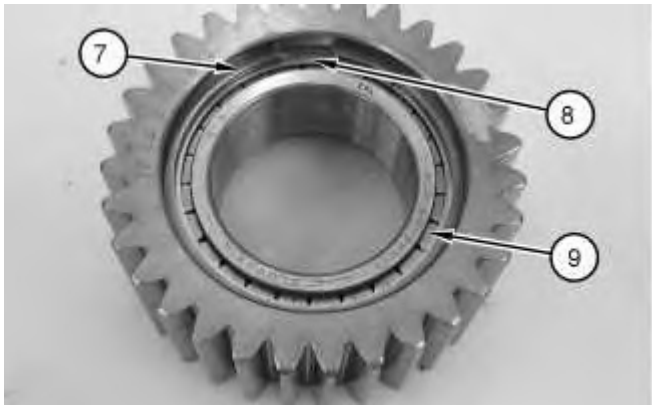

BUY NOW

PayPal VISA MasterCard DISCOVER AMERICAN EXPRESS

Download the full PDF manual instantly.

Our customer service e-mail:

aservicemanualpdf@yahoo.com