**S/N -** WDK1-UP

**S/N -** WLT1-UP

**S/N -** XDB1-UP

**S/N -** YFW1-UP

# Assembly Procedure

Table 1

| Required Tools | | | |
|---|---|---|---|
| **Tool** | **Part Number** | **Part Description** | **Qty** |
| B | 1P-2420 | Transmission Repair Stand | 1 |
| C | 138-7575 | Link Bracket | 3 |
| D | 1P-0510 | Driver Group | 1 |
| | 1U-8605 | Seal Guide | 1 |
| E | 1P-1859 | Retaining Ring Pliers | 1 |
| H | 1U-6396 | O-Ring Assembly Compound | 1 |

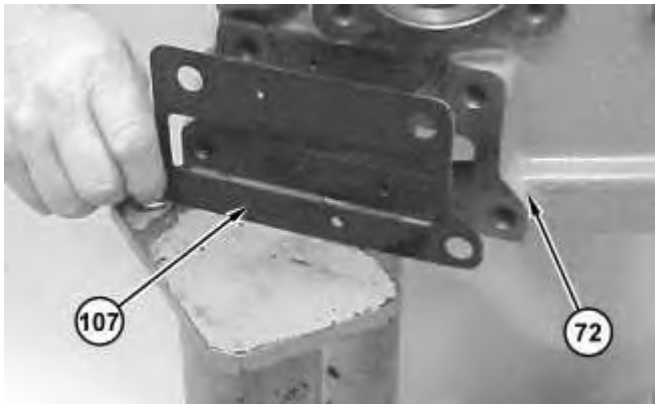


Illustration 1 g01200516

1. Install gasket (107) onto pump housing (72) .

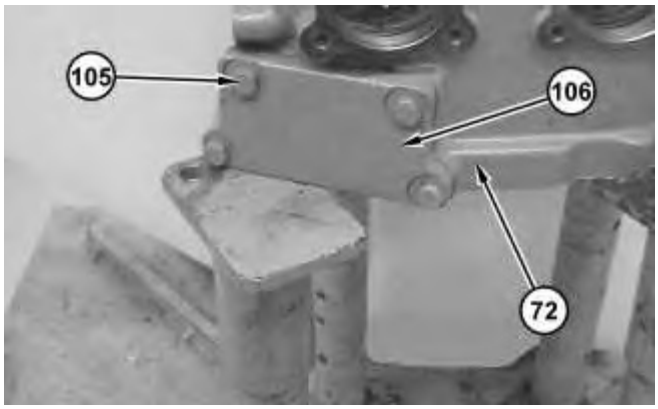


Illustration 2 g01200514

2. Install cover (106) and bolts (105) onto pump housing (72) .

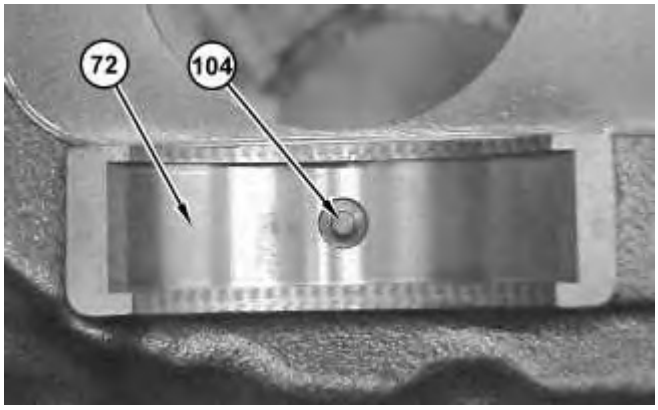


Illustration 3 g01200512

3. Install guide pins (104) onto pump housing (72) .

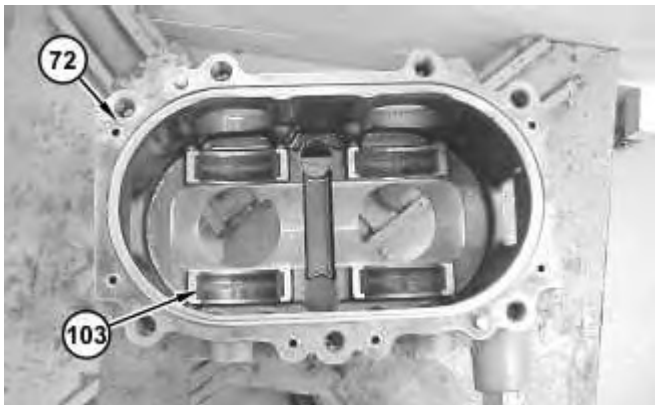


Illustration 4 g01200511

4. Install bearings (103) onto pump housing (72) .

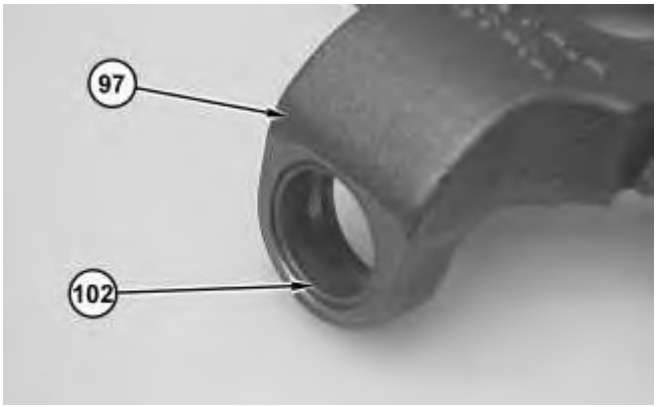


Illustration 5 g01200510

5. Install bearing (102) into swashplate (97) .

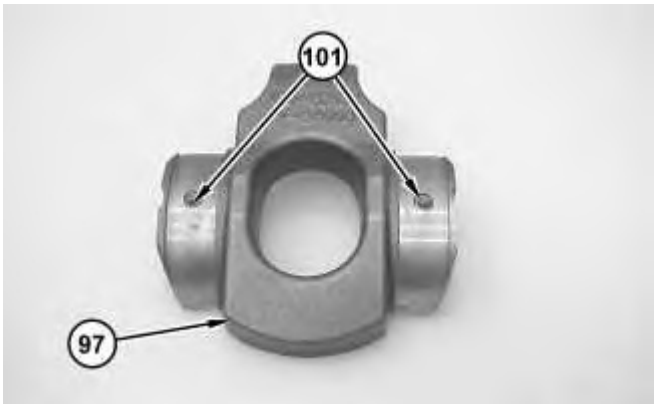


Illustration 6 g01200509

6. Install dowel pins (101) into swashplate (97) .

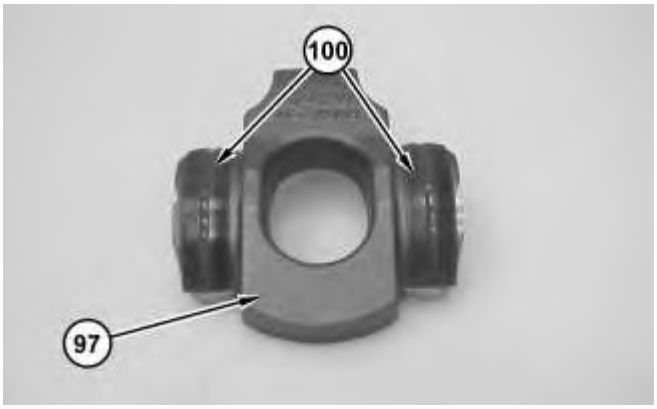

Illustration 7 g01200507

7. Install bearings (100) onto swashplate assembly (97) .

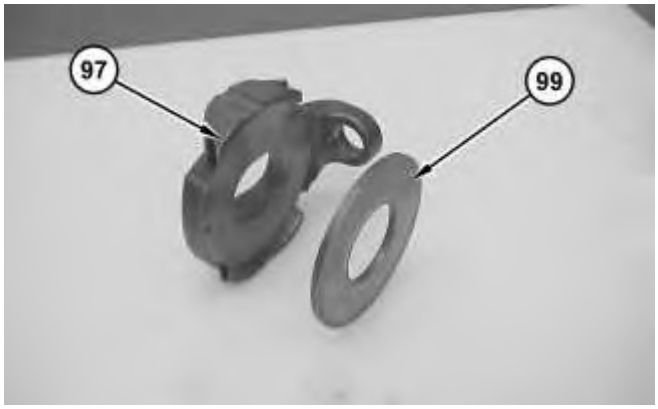


Illustration 8 g01200506

8. Install plate (99) onto swashplate assembly (97) .
9. Repeat Step 5 through Step 8 for swashplate assembly (98) .

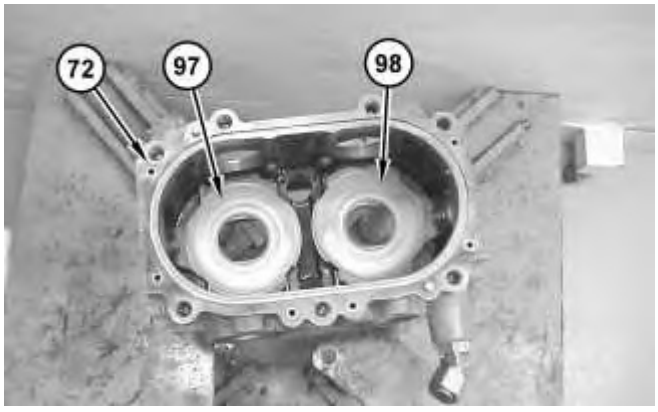


Illustration 9 g01200504

10. Install swashplate assemblies (97) and (98) into pump housing (72) .

    **Note:** The swashplate assemblies must be installed in the original position during assembly.

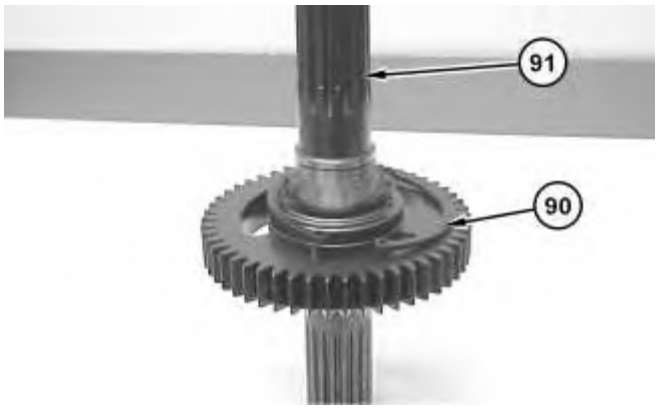


Illustration 10 g03723301

11. Install retaining ring (90) onto shaft assembly (91) .

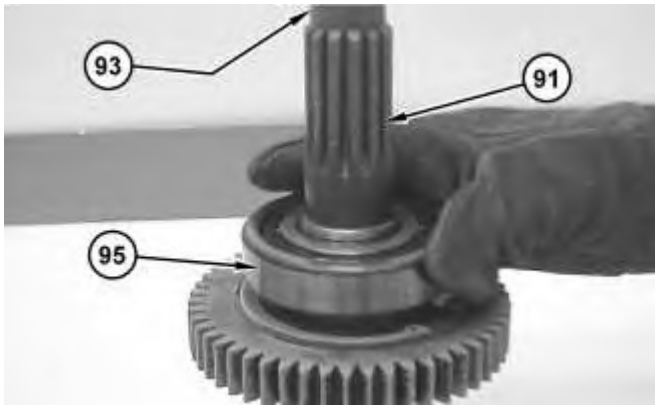


Illustration 11 g01201656

12. Raise the temperature of bearing (95) and bearing (93) . Install bearing (95) and bearing (93) onto shaft assembly (91) .

Illustration 12 g01200498

13. Install ring (94) onto shaft assembly (91) .

14. Repeat Step 11 through Step 13 for shaft assembly (92) .

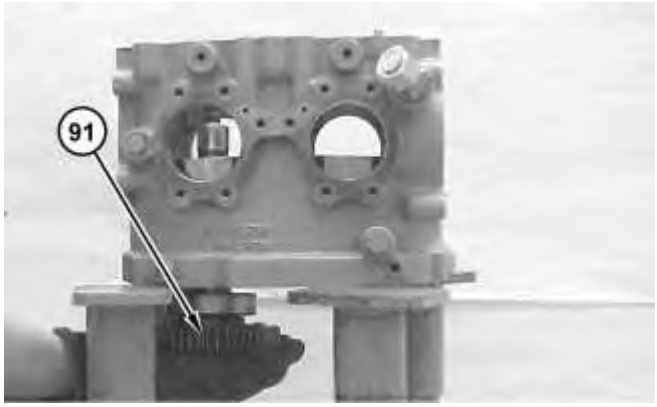


Illustration 13 g01201657

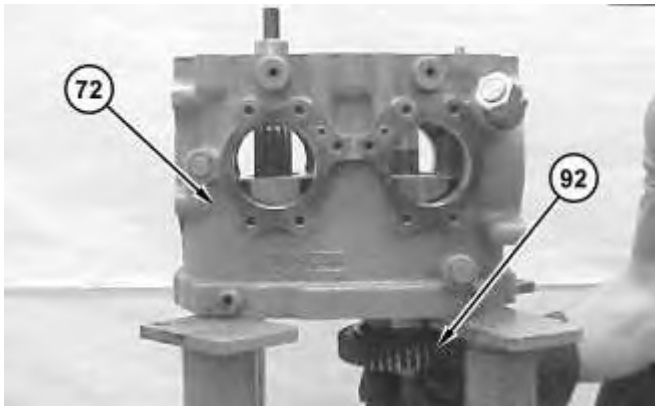


Illustration 14 g01201658

15. Lower the temperature of the shaft assemblies. Install shaft assemblies (91) and (92) into pump housing (72) .

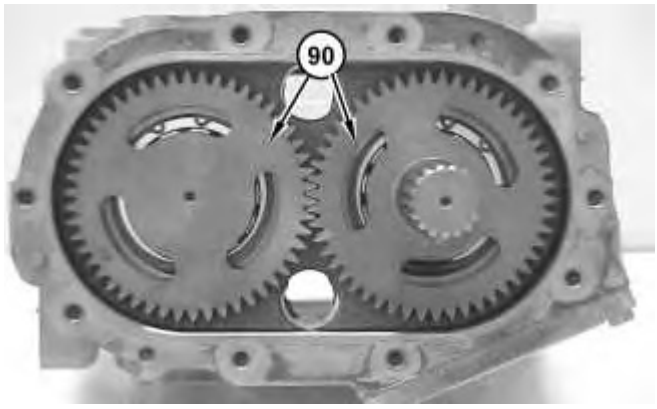

Illustration 15 g01200492

**Note:** The pump has been removed from Tooling (B) for photographic purposes only.

16. Use Tooling (E) to install retaining rings (90) .

Illustration 16 g01200491

17. Install springs (89) into barrel (84) .

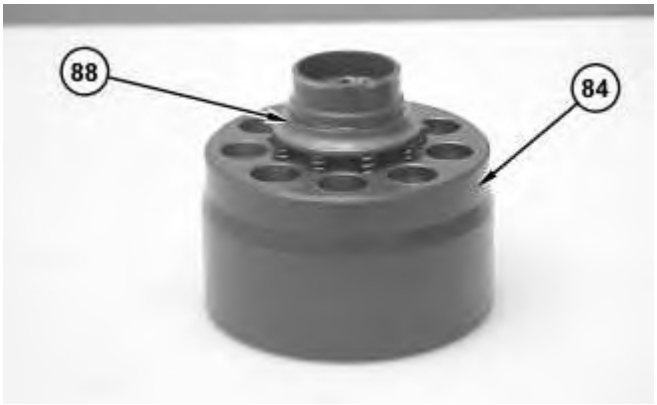


Illustration 17 g01200488

18. Install retainer (88) onto barrel (84) .

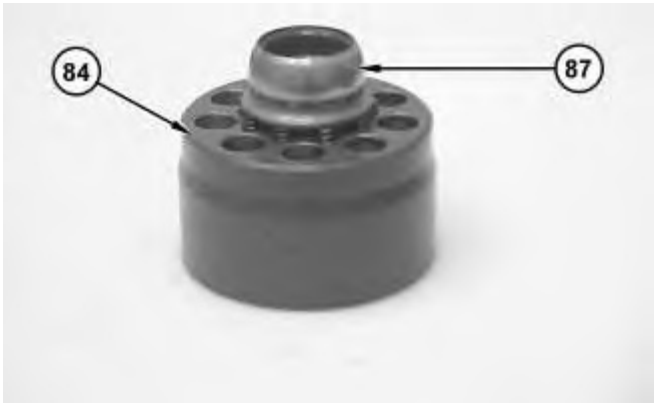


Illustration 18 g01200487

19. Install cap (87) onto barrel (84) .

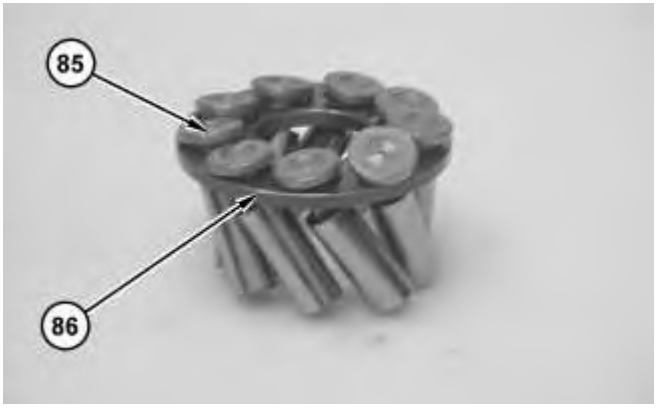


Illustration 19 g01200486

20. Install pistons (85) into piston plate (86) .

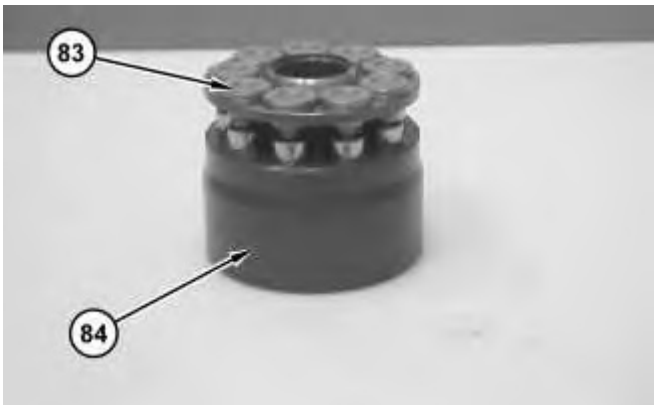


Illustration 20 g01200485

21. Install piston assembly (83) into barrel (84) .

22. Repeat Step 17 through Step 21 for the remaining barrel assembly.

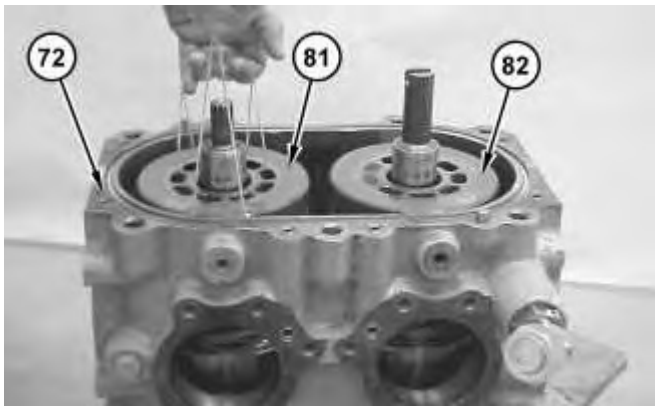


Illustration 21 g01200482

23. Install barrel assemblies (81) and (82) into pump housing (72) .

**Note:** It may be necessary to use string to aid in the removal procedure. The barrel assemblies must be installed in the original position during assembly.

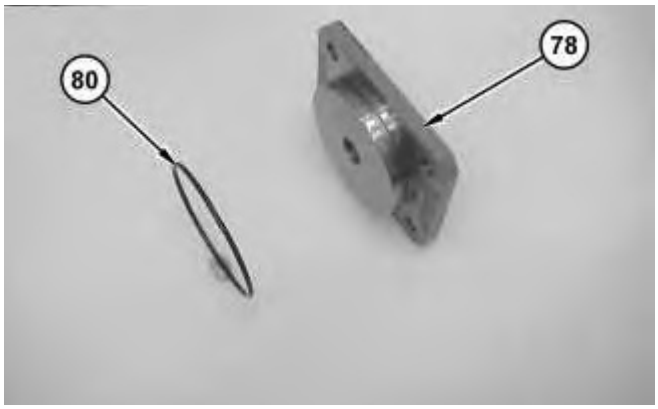


Illustration 22 g01200481

24. Install O-ring seal (80) onto covers (78) .

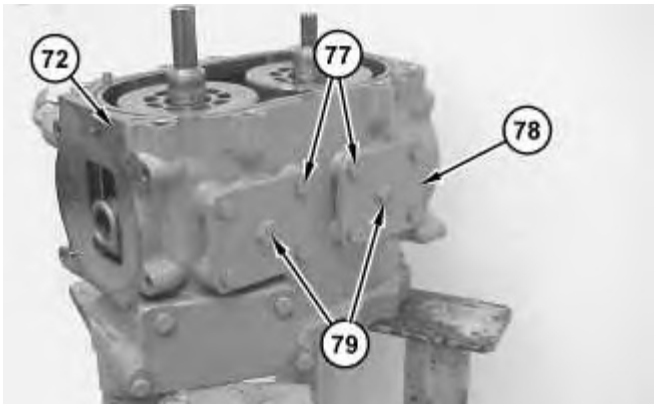


Illustration 23 g01200477

25. Install covers (78) , bolts (77) , and plugs (79) onto pump housing (72) .

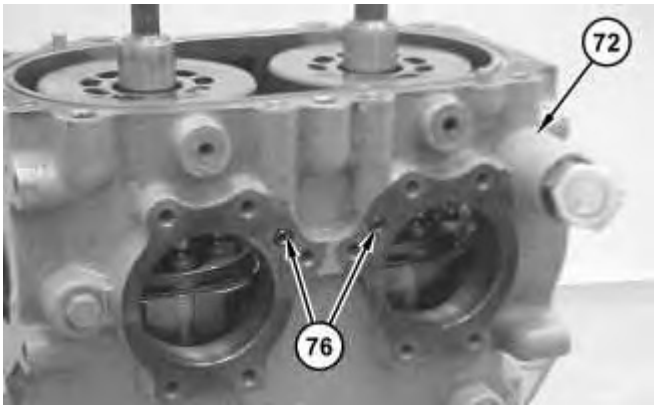


Illustration 24 g01200478

26. Install O-ring seals (76) into pump housing (72) .

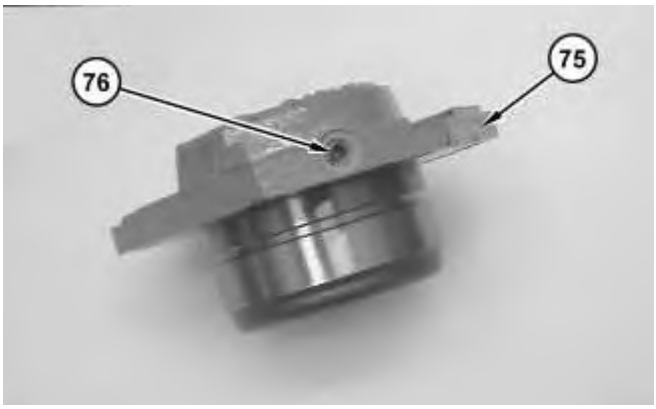


Illustration 25 g01200475

27. Install plug (76) into covers (75) .

**Download the full PDF manual instantly.**

**Our customer service e-mail:**

**aservicemanualpdf@yahoo.com**