Product: MINI HYD EXCAVATOR
Model: 304E MINI HYD EXCAVATOR TTN
Configuration: 304E Mini Hydraulic Excavator TTN00001-UP (MACHINE)

Disassembly and Assembly
303E CR, 303.5E, 304E, 305.5E and 305E Mini Hydraulic Excavators Machine Systems
Media Number -UENR0148-04 **Publication Date -01/10/2016** **Date Updated -25/10/2016**

i04713070

Sprocket - Remove and Install

SMCS - 4164-010

Removal Procedure

Start By:

a. Remove the track.

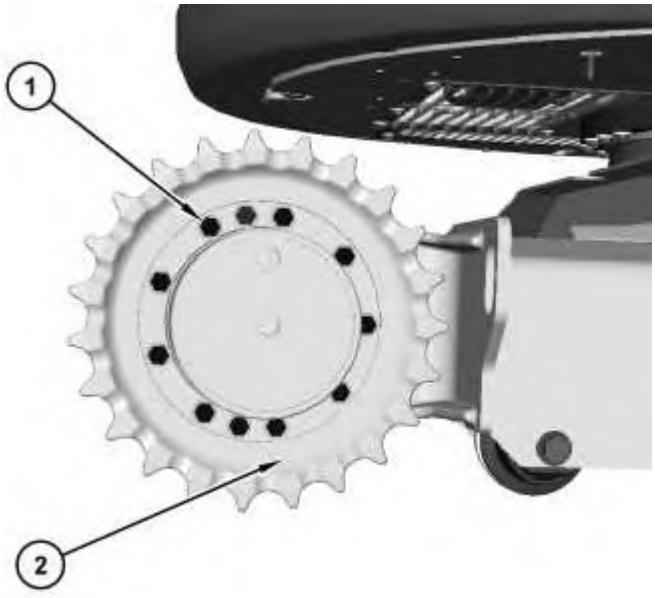

Illustration 1 g02817696

1. Remove bolts (1) and sprocket (2).

Installation Procedure

Table 1

Required Tools			
Tool	**Part Number**	**Part Description**	**Qty**
A	-	Loctite 242	-

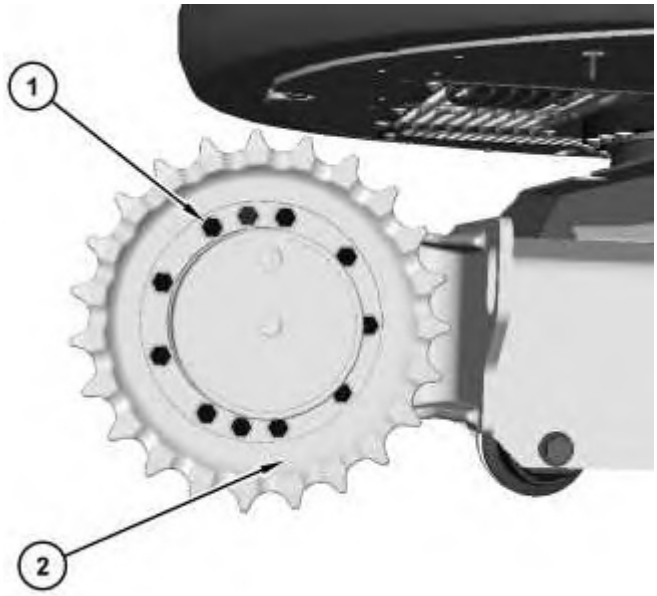

Illustration 2 g02817696

1. Install sprocket (2). Install Tooling (A) to bolts (1). Install bolts (1).

End By:

a. Install the track.

Product: MINI HYD EXCAVATOR
Model: 304E MINI HYD EXCAVATOR TTN
Configuration: 304E Mini Hydraulic Excavator TTN00001-UP (MACHINE)

Disassembly and Assembly
303E CR, 303.5E, 304E, 305.5E and 305E Mini Hydraulic Excavators Machine Systems
Media Number -UENR0148-04 **Publication Date -01/10/2016** **Date Updated -25/10/2016**

i04713101

Final Drive and Travel Motor - Remove

SMCS - 4050-011; 4351-011

Removal Procedure

Table 1

Required Tools			
Tool	**Part Number**	**Part Description**	**Qty**
A	138-7575	Link Bracket	1

Start By:

a. Remove the sprocket.

b. Release the hydraulic system pressure.

Note: Put identification marks on all lines, on all hoses, on all wires, and on all tubes for installation purposes. Plug all lines, hoses, and tubes in order to prevent fluid loss and to keep contaminants from entering the system.

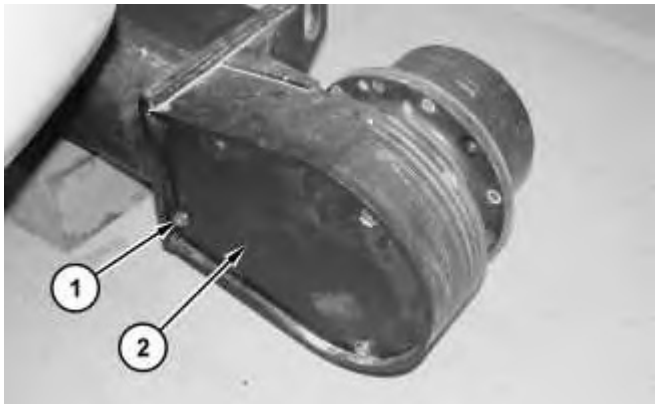

Illustration 1 g01229641

1. Remove bolts (1) and cover (2).

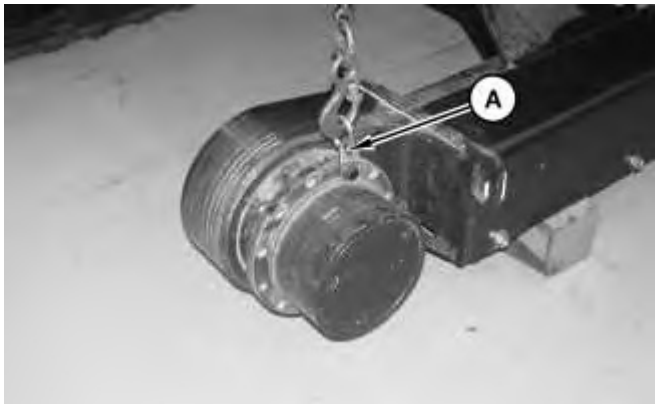

Illustration 2 g01229644

2. Attach Tooling (A) and a suitable lifting device to the final drive and travel motor. The weight of the final drive and travel motor is approximately 63 kg (140 lb).

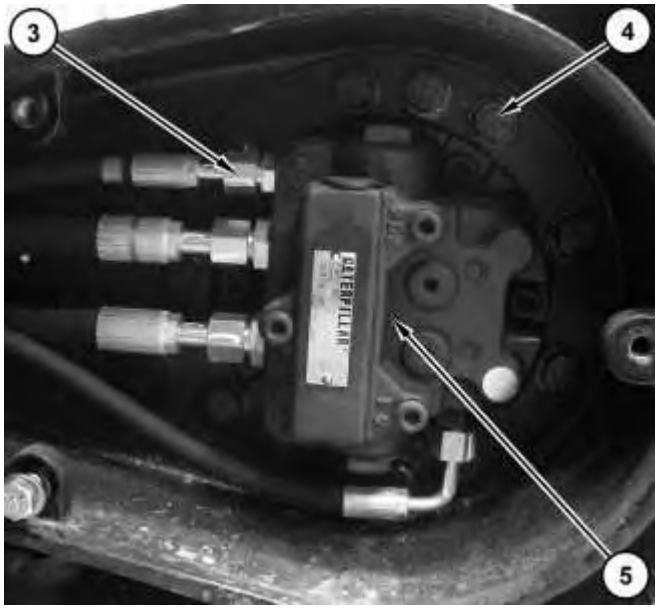

Illustration 3 g02822616

Illustration 4 g01229645

3. . Disconnect hose assemblies (3). Remove bolts (4) and the final drive and travel motor (5).

Product: MINI HYD EXCAVATOR
Model: 304E MINI HYD EXCAVATOR TTN
Configuration: 304E Mini Hydraulic Excavator TTN00001-UP (MACHINE)

Disassembly and Assembly
303E CR, 303.5E, 304E, 305.5E and 305E Mini Hydraulic Excavators Machine Systems
Media Number -UENR0148-04 **Publication Date -01/10/2016** **Date Updated -25/10/2016**

i06024633

Final Drive and Travel Motor - Disassemble

SMCS - 4050-015; 4351-015

Disassembly Procedure

Table 1

Required Tools			
Tool	**Part Number**	**Part Description**	**Qty**
A	1U-9895	Crossblock	1
B	1P-1857	Retaining Ring Pliers	1
C	9S-9152	Bearing Puller Gp	1
D	289-6052	Spanner Wrench	1

Start By:

A. Remove the final drive and the travel motor.

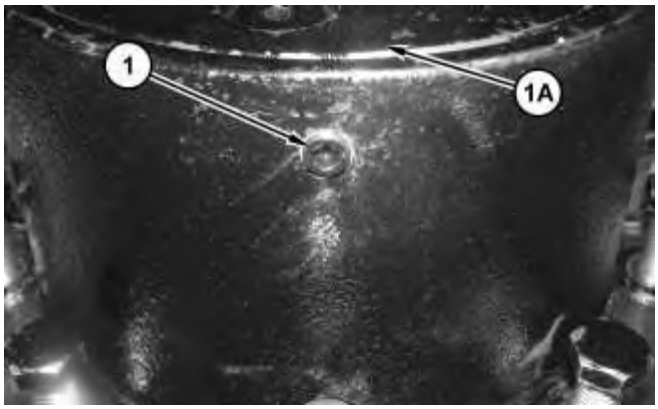

Illustration 1 g01244969

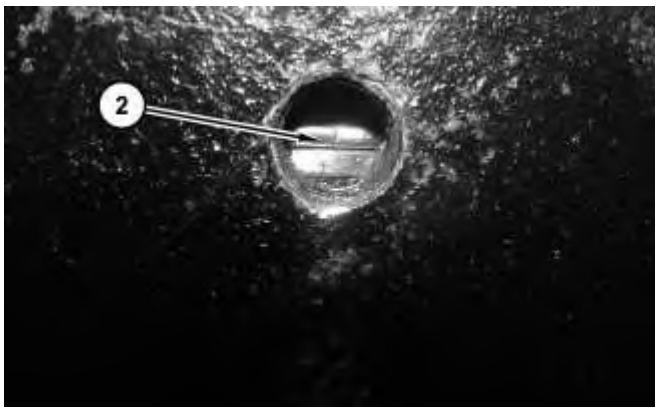

Illustration 2 g01244970

1. Remove plug (1) .
2. Remove wire (2) and cover (1A) .

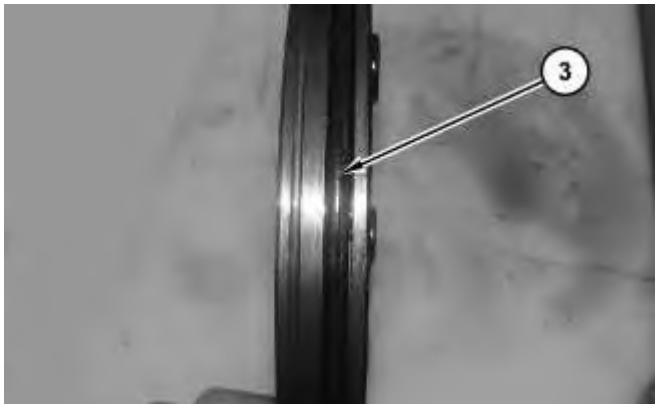

Illustration 3 g01244971

3. Remove O-ring seal (3) .

Illustration 4 g01244973

4. Remove plate (4) .

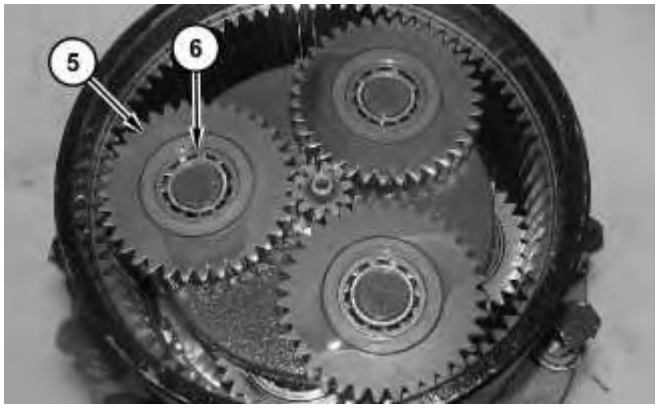

Illustration 5 g01244975

5. Remove gears (5) and bearings (6) .

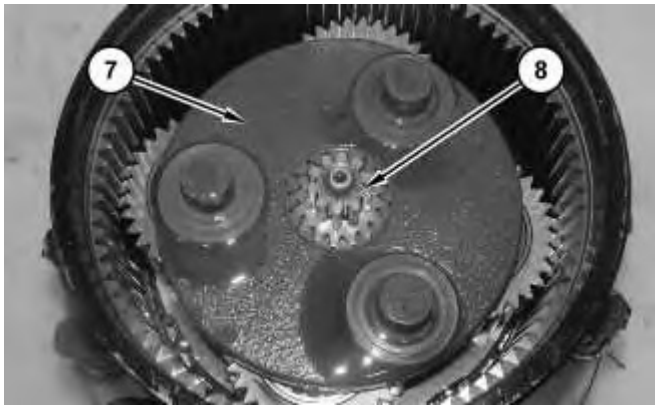

Download the full PDF manual instantly.

Our customer service e-mail:

aservicemanualpdf@yahoo.com