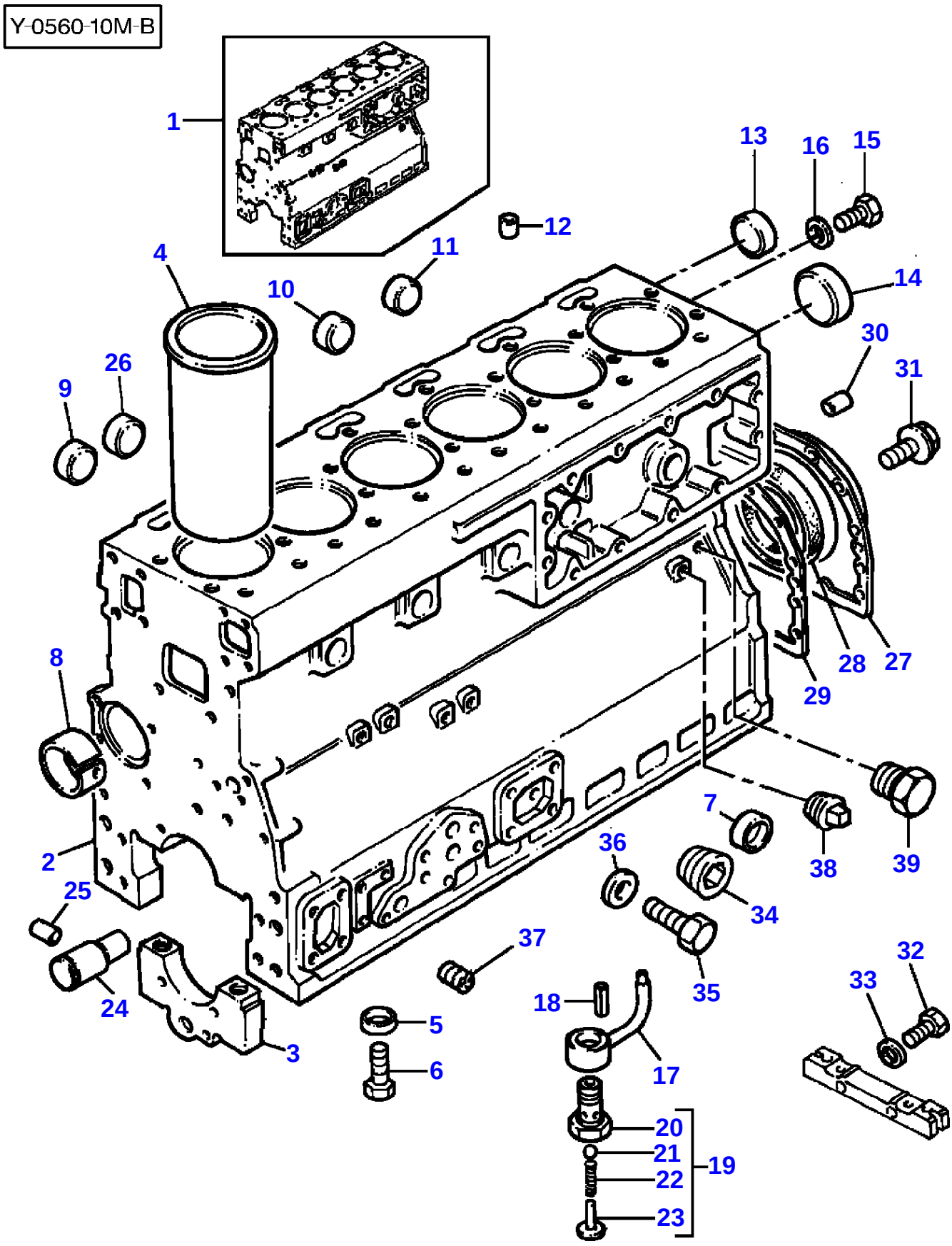
Y-0560-10M-B
1
2
3
4
5
6
7
8
9
10
11
12
13
14
15
16
17
18
19
20
21
22
23
24
25
26
27
28
29
30
31
32
33
34
35
36
37
38
39

Item	Part Number	Qty	Description	Comments
				T6.60 ENGINE
1	3641789M91	1	Kit,Cyl.Block	Repairs and replaces 3638332M91 Repairs and replaces 3638406M91
2		1	Block	(1) Not serviced, order REF.1
3		7	Cap	(1) Not serviced, order REF.1
4	748216M1	6	Liner	[A] (1)
	748215M1	6	Liner	[B]
5	733072M1	14	Ring	(1)
6	1476108X1	14	Screw	(1)
7	746259M1	5	Plug	(1)
8	4222017M1	1	Bush	(1)
9	746259M1	3	Plug	(1)
10	746259M1	5	Plug	(1)
11	1476282X1	1	Plug	(1)
12	736868M1	1	Plug	(1)
13	746259M1	1	Plug	(1)
14	4222043M1	1	Plug	(1) 3637015M1
15	376180X1	1	Plug	(1)
16	3638664M1	1	Washer	(1)
17	747856M91	6	Jet	(1)
18	1447763M1	6	Dowel	(1)
19	3637005M91	6	Valve	(1)
20		1	Body	(19) Not serviced, order REF.19
21	3637006M1	1	Ball	(19)
22	748149M1	1	Spring	(19)
23	3637007M1	1	Retainer	(19)
24	3637077M1	1	Shaft	(1)
25	3638414M1	1	Pin	(1)
26	746259M1	3	Plug	(1)
27	3640868M91	1	Housing	[C]
28	1447691M1	1	Seal	(24)
29	3641224M1	1	Gasket	Repairs and replaces 3640675M1
30	731947M1	2	Dowel	
31	3637008M1	10	Screw	[D]
	3637008M1	12	Screw	[E]
32	3638590M1	2	Screw	
33	745015M1	2	Washer	
34	1476192X1	1	Plug	
35	3638809M1	1	Screw	
36	1650388M1	1	Washer	
37	748393M1	4	Plug	
38	731996M1	2	Plug	
39	376670X1	2	Plug	

[A]
SLIP FIT

[B]
PRESS FIT

[C]
WAS 3638347M91 USE 3640868M91 + 3641089M1 + 363700 8M1 (2) + 3640947M1

[D]
USED ONLY WITH 3638347M91

[E]
USED ONLY WITH 3640868M91

Y-0563-10M-A

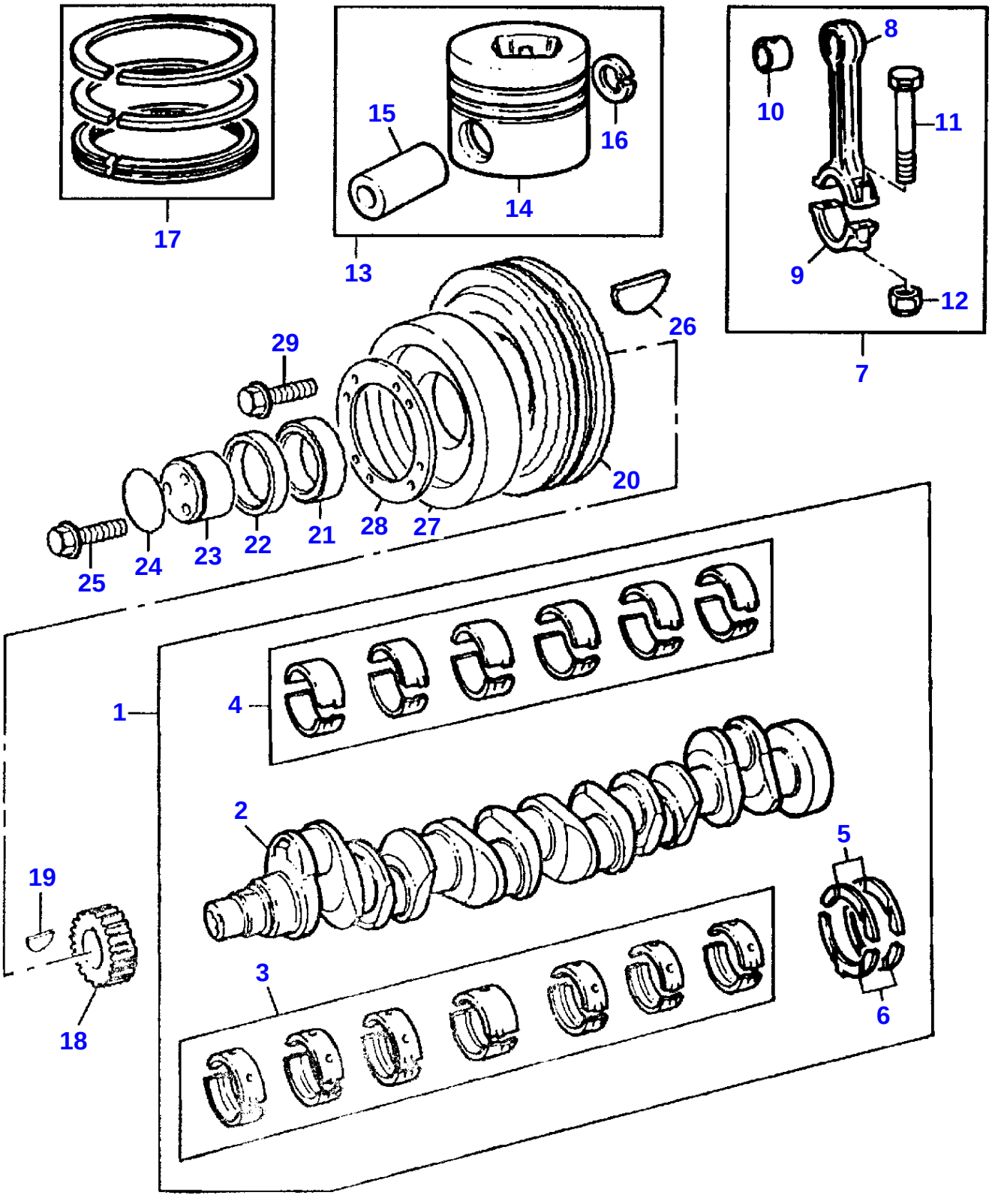

CRANKSHAFT, PISTONS AND CONNECTING RODS - T6.60 ENGINE 8

Item	Part Number	Qty	Description	Comments
				T6.60 ENGINE
1	3637019M91	1	Kit, Crankshaft	
2		1	Crankshaft	(1) Not serviced, order REF.1
3	3637020M91	1	Kit, Bearing	[A] (1)
	3637021M91	X	Kit, Bearing	[A] Thickness (-)0.25MM
3	3637022M91	X	Kit, Bearing	[A] Thickness (-)0.50MM
3	3637023M91	X	Kit, Bearing	[A] Thickness (-)0.75MM
4	3637024M91	1	Kit, Bearing	[A] (1)
	3637025M91	X	Kit, Bearing	[A] Thickness (-)0.25MM
4	3637026M91	X	Kit, Bearing	[A] Thickness (-)0.50MM
4	3637027M91	X	Kit, Bearing	[A] Thickness (-)0.75MM
5	747128M1	2	Thrust Washer	(1)
	735742M1	X	Washer	Thickness (+)0.19MM
6	747129M1	2	Thrust Washer	(1)
	735743M1	X	Washer	Thickness (+)0.19MM
7	3637028M91	6	Kit, Conrod	
8		1	Rod	(7) Not serviced, order REF.7
9		1	Cap	(7) Not serviced, order REF.7
10	744971M1	1	Bush	(7)
11	3637029M1	2	Bolt	(7)
12	3637030M1	2	Nut	(7)
13	3640593M91	6	Kit, Piston	
14		1	Piston	(13) Not serviced, order REF.13
15		1	Pin	(13) Not serviced, order REF.13
16	1476196X1	2	Circlip	(13) Not serviced, order REF.13
17	3641316M91	6	Kit, Piston Ring	
18	748201M1	1	Gear	Number of teeth/spines 28
19	2196X	1	Key	
20	3638588M1	1	Pulley	
21	748315M1	1	Spacer	
22	1447128M1	1	Spacer	
23	742536M1	1	Thrust Plate	
24	1447207M1	1	O Ring	
25	748074M1	3	Screw	
26	11940X	1	Woodruff Key	
27	1476037M1	1	Damper	
28	3638589M1	1	Plate	
29	3638590M1	6	Screw	
				[A] PRE-FINISHED

Y-0566-10M-A

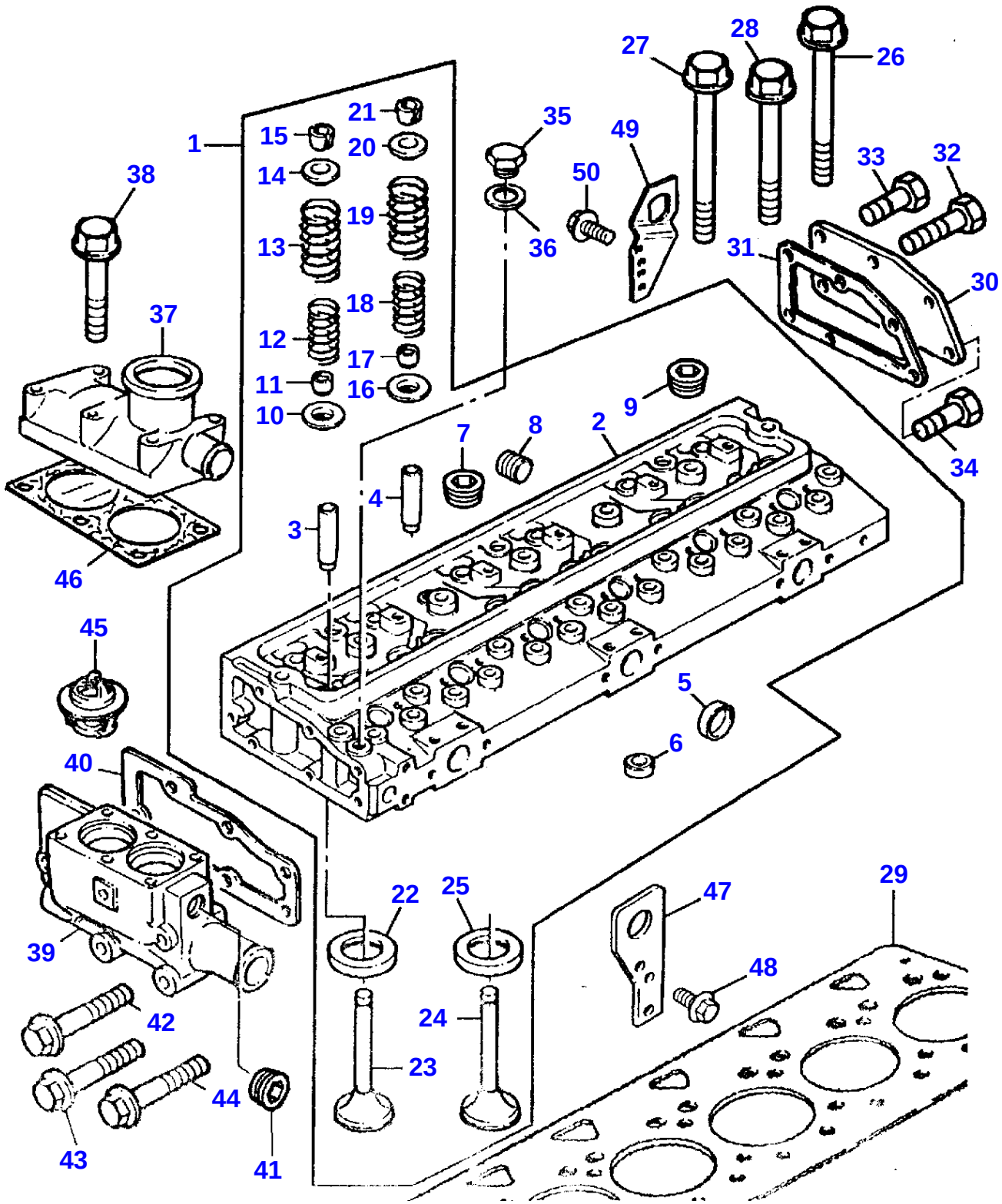
1
2
3
4
5
6
7
8
9
10
11
12
13
14
15
16
17
18
19
20
21
22
23
24
25
26
27
28
29
30
31
32
33
34
35
36
37
38
39
40
41
42
43
44
45
46
47
48
49
50

Item	Part Number	Qty	Description	Comments
				T6.60 ENGINE
1	3641804M91	1	Kit, Cyl. Head	Repairs and replaces 3640596M91
2		1	Head	(1) Not serviced, order REF.1
3	3640676M1	6	Guide	(1)
4	748420M1	6	Guide	(1)
5	731354M1	3	Plug	(1)
6	746260M1	6	Plug	(1)
7	366947X1	1	Plug	[B] (1)
	376606X1	1	Plug	[C]
8	3637040M1	1	Plug	(1)
9	1476192X1	6	Plug	(1)
10	733824M1	6	Washer	(1)
11	3637041M1	6	Seal	(1)
12	740465M1	6	Spring	[B] (1)
	3637057M1	6	Spring	[C]
13	740467M1	6	Spring	[B] (1)
14	740468M1	6	Cap	[B] (1)
	3637058M1	6	Cap	[C]
15	736453M1	12	Cotter	[A] (1)
16	733824M1	6	Washer	(1)
17	3637041M1	6	Seal	(1)
18	740465M1	6	Spring	[B] (1)
	3637057M1	6	Spring	[C]
19	740467M1	6	Spring	[B] (1)
20	740468M1	6	Cap	[B] (1)
	3637058M1	6	Cap	[C]
21	736453M1	12	Cotter	[A] (1)
22	3640677M1	6	Insert	(1)
23	3640597M1	6	Valve Inlet	(1)
24	748309M1	6	Valve Exhaust	(1)
25	3640712M1	6	Insert	(1)
26	1476243X1	2	Screw	
27	745662M1	12	Screw	
28	745663M1	18	Screw	
29	3640916M1	1	Head Gasket	Repairs and replaces 3637059M1
30	748368M1	1	Plate	
31	3638693M1	1	Joint	
32	3637011M1	3	Screw	
33	3637053M1	2	Screw	
34	3637008M1	1	Screw	
35	731410M1	1	Plug	
36	376178X1	1	Washer	
37	3637045M1	1	Connection	
38	3637046M1	6	Screw	
39	3641311M1	1	Housing	
40	3638702M1	1	Joint	
41	376606X1	2	Plug	
42	3637048M1	1	Screw	
43	3637046M1	2	Screw	
44	3637049M1	2	Screw	
45	1447384M1	2	Thermostat	
46	3638700M1	1	Joint	Repairs and replaces 748302M1
47	3637050M1	1	Plate	
48	3637051M1	2	Screw	
49	3638411M1	1	Plate	
50	3637051M1	2	Screw	

[A]
SERVICED IN PAIRS

[B]
USED ONLY WITH 3640595M91

[C]
USED ONLY WITH 3640596M91

Y-0569-10M-A

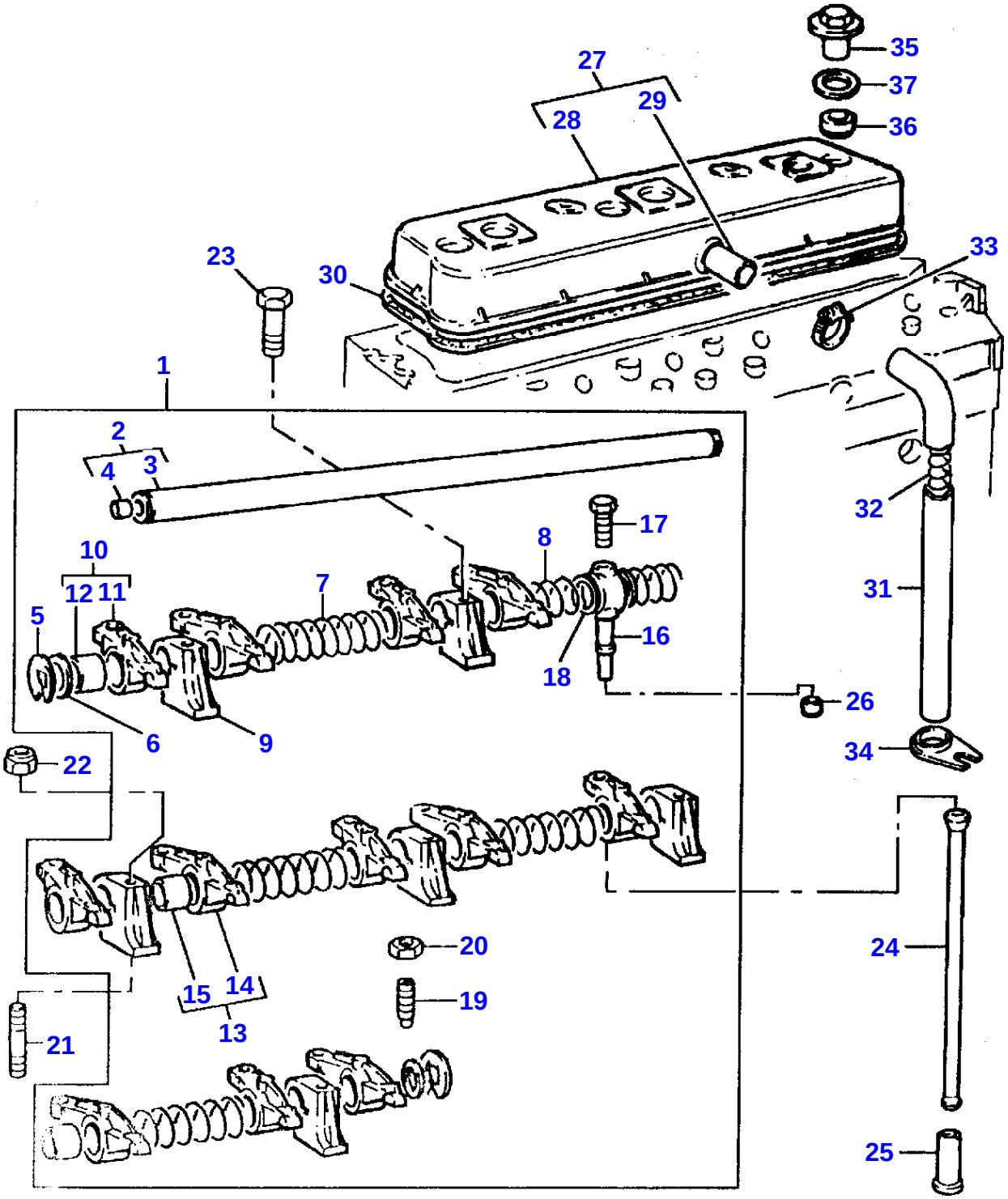
35
27
37
29
28
36
23
30
33
1
2
4
3
32
17
8
10
7
12
11
31
5
16
18
26
6
9
34
22
20
24
15
14
19
13
21
25

ROCKER SHAFT - T6.60 ENGINE 10

Item	Part Number	Qty	Description	Comments
				T6.60 ENGINE
1	3637060M91	1	Rocker Shaft Ass	
2	3637062M91	1	Rocker Shaft	(1)
3		1	Shaft	(2)
				Not serviced, order REF.2
4	731330M1	2	Plug	(2)
5	376137X1	2	Circlip	(1)
6	747876M1	2	Washer	(1)
7	733811M1	4	Spring	(1)
8	733812M1	2	Spring	(1)
9	3638403M1	6	Bracket	(1)
10	3641306M91	6	Rockerarm	(1)
				Right Hand
11		1	Lever	(10)
				Not serviced, order REF.10
12	895748M1	1	Bush	(10)
13	3641247M1	6	Lever	(1)
				Left Hand
14		1	Lever	(13)
				Not serviced, order REF.13
15	895748M1	1	Bush	(13)
16	3638499M1	1	Connection	(1)
17	3638500M1	1	Screw	
18	739513M91	2	Shim	(1)
19	731516M1	12	Bolt	(1)
20	376123X1	12	Nut	(1)
21	3637066M1	4	Stud	
22	3637067M1	4	Nut	
23	3637073M1	2	Screw	
24	733817M1	12	Rod	
25	4222069M1	12	Tappet	740671M1
26	376525X1	1	Olive	
27	3641896M1	1	Cover	3637069M91
28		1	Cover	(27)
				Not serviced, order REF.27
29	3638447M1	1	Connection	(27)
30	748329M1	1	Joint	
31	740597M1	1	Pipe	
32	745540M1	1	Spring	
33	3638598M1	1	Clip	Repairs and replaces 1447613M1
34	745489M1	1	Bracket	
35	3637070M1	4	Nut	
36	744387M1	4	Seal	
37	365691X1	4	Shim	

Y-0647-04M-A

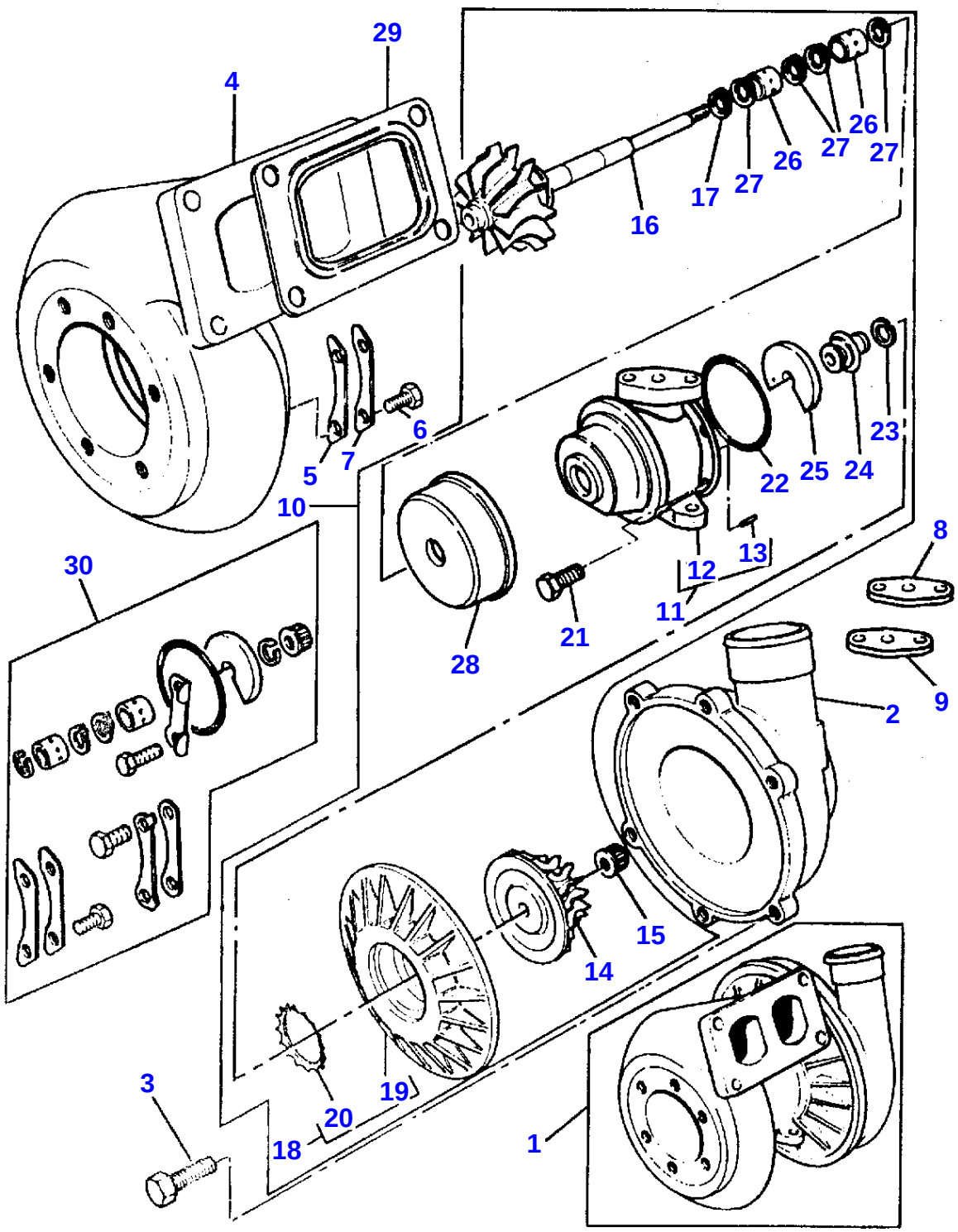
29
4
26
27
26
27
27
17
16
6
5
7
23
22
25
24
10
8
30
12
13
11
21
28
9
2
15
14
3
19
20
18
1

TURBOCHARGER - T6.60 ENGINE

11

Item	Part Number	Qty	Description	Comments
				T6.60 ENGINE
1	3640538M91	1	Turbocharger	
2	3640701M1	1	Housing	(1)
3	3638450M1	6	Bolt	[A] (1)
4	3640702M1	1	Housing	(1)
5	1896263M1	3	Clamp	[A] (1)
6	3640703M1	6	Bolt	[A] (1)
7	3637128M1	3	Clamp	[A] (1)
8	3641064M1	1	Gasket	(1)
9	3640705M1	1	Gasket	(1)
10	3640706M1	1	Housing	(1)
11	3637133M91	1	Housing	(10)
12		1	Housing	(11) Not serviced, order REF.11
13		2	Pin	(11) Not serviced, order REF.11
14	1896441M1	1	Impeller	(10)
15	3638041M1	1	Nut	[A] (10)
16	3640707M1	1	Turbine	(10)
17	3638388M1	1	Piston Ring	[A] (10)
18	1896247M91	1	Plate	(10)
19		1	Plate	(18) Not serviced, order REF.18
20		1	Washer	(18) Not serviced, order REF.18
21	3640708M1	4	Bolt	[A] (10)
22	1896248M1	1	Seal	[A] (10)
23	1896249M1	1	Ring	[A] (10)
24	3640709M1	1	Collar	(10)
25	3640695M1	1	Bearing Thrust	[A] (10)
26	3638048M1	2	Bearing	[A] (10)
27	1896253M1	4	Ring	[A] (10)
28	1896255M1	1	Shroud	(10)
29	3638274M1	1	Joint	
30	1896444M91	X	Kit, Turbochargr	
				[A] ALSO INCLUDED IN REPAIR KIT

Y-0648-04M-A

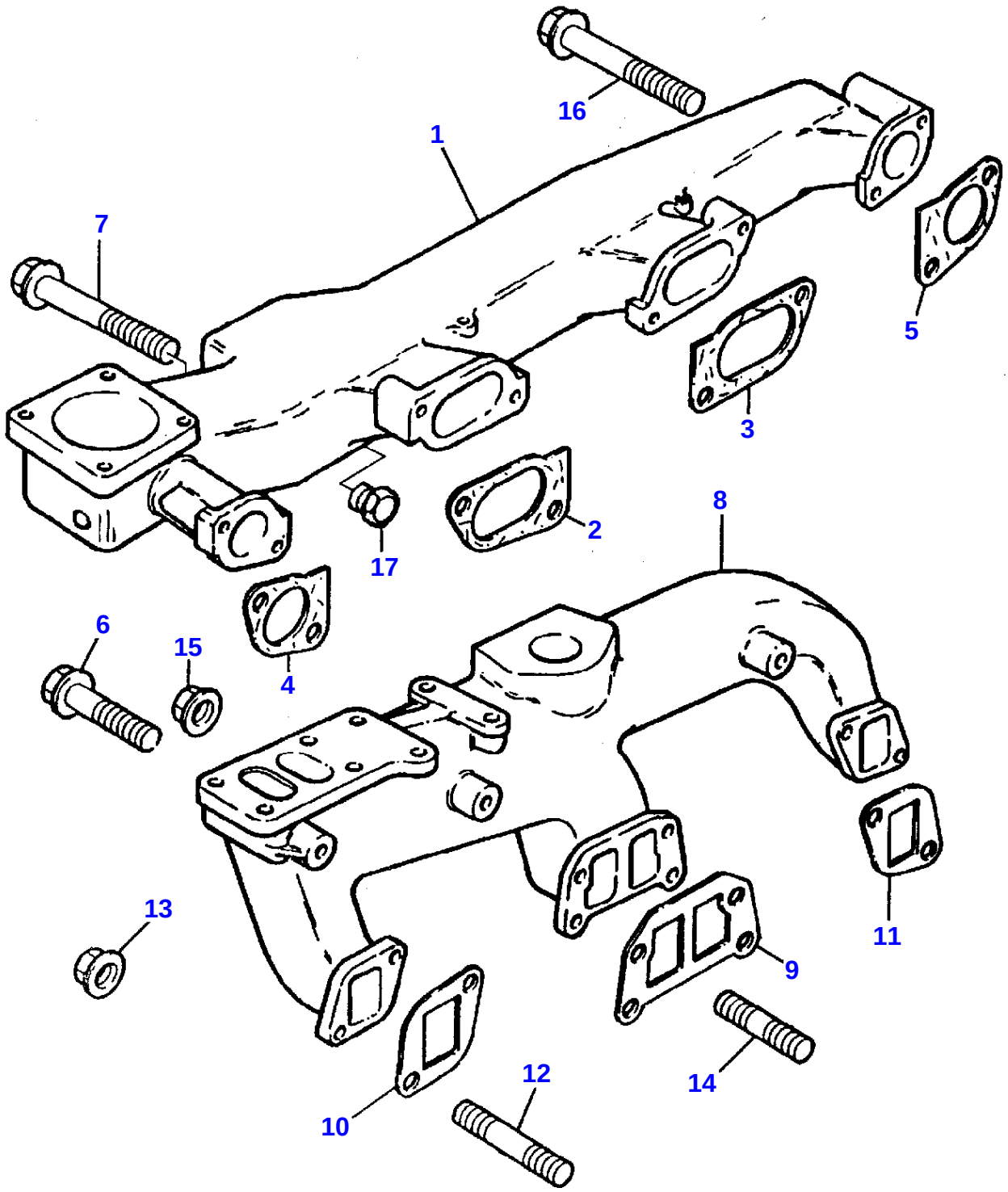

TURBOCHARGER-INLET AND EXHAUST MANIFOLD - T6.60 ENGINE 12

Item	Part Number	Qty	Description	Comments
				T6.60 ENGINE
1	3637103M1	1	Manifold	
2	744158M1	1	Joint	
3	744158M1	1	Joint	
4	744159M1	1	Joint	
5	744159M1	1	Joint	
6	3637104M1	2	Screw	
7	3637105M1	5	Screw	
8	4222047M1	1	Exhaust Manifold	3638257M1
9	3638258M1	1	Joint	
10	744162M1	1	Gasket	
11	744162M1	1	Gasket	
12	3641787M1	4	Stud	3637107M1
13	3637108M1	4	Nut	
14	1476290X1	4	Stud	
15	3637108M1	4	Nut	
16	3637109M1	1	Screw	
17	731818M1	1	Plug	

Y-0649-04M-A

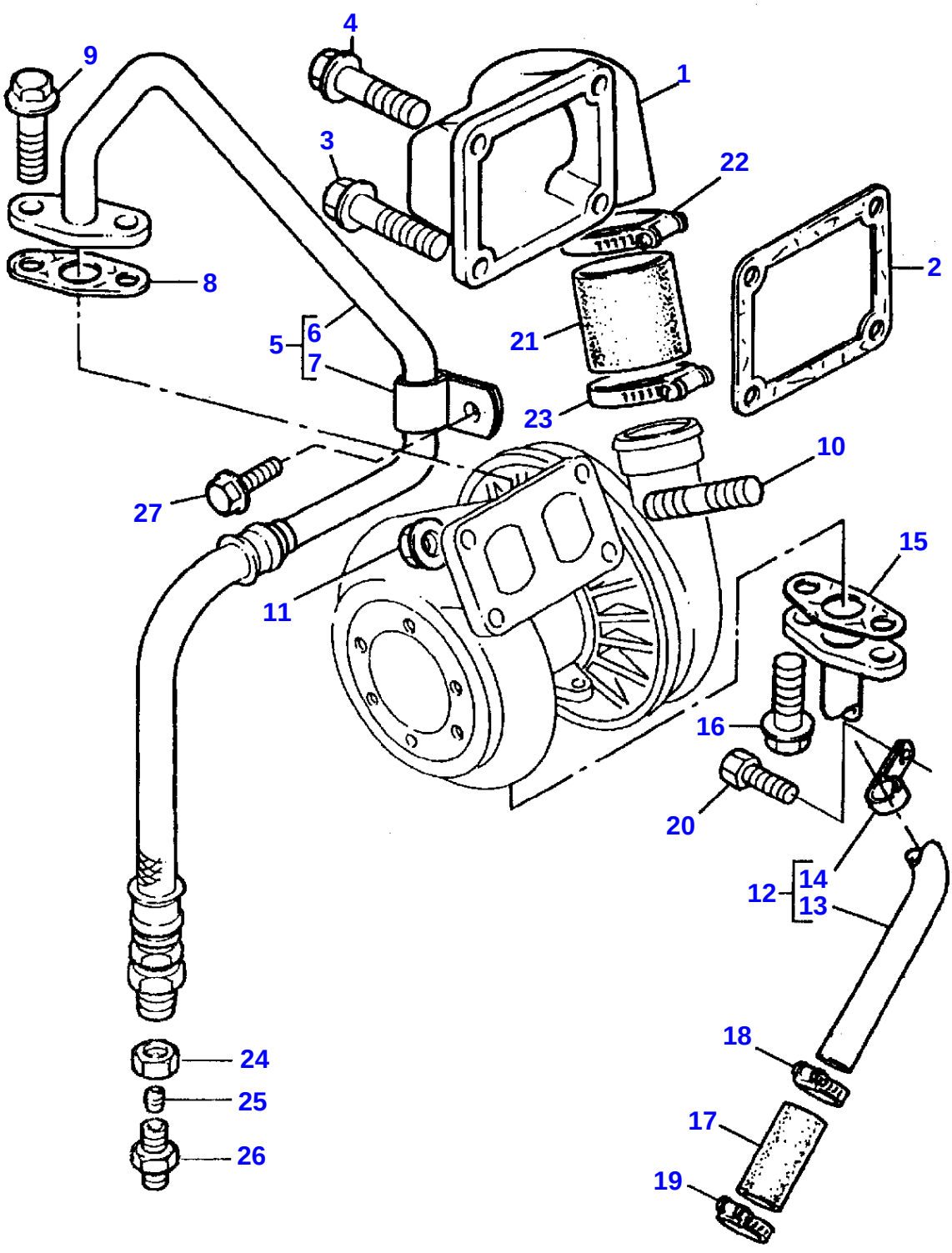

TURBOCHARGER-PIPES AND HEAT SHIELDS - T6.60 ENGINE 13

Item	Part Number	Qty	Description	Comments
				T6.60 ENGINE
1	3638410M1	1	Elbow	
2	3638701M1	1	Joint	
3	3637053M1	2	Screw	
4	3637053M1	2	Screw	
5	3638526M91	1	Pipe	
6		1	Pipe,Oil	(5) Not serviced, order REF.5
7	3640696M1	1	Clip	(5)
8	3638256M1	1	Joint	
9	3637011M1	2	Screw	
10	3637111M1	4	Stud	
11	3637108M1	4	Nut	
12	3637114M91	1	Pipe	
13		1	Pipe,Oil	(12) Not serviced, order REF.12
14	3637115M1	1	Clip	(12)
15	3638671M1	1	Joint	
16	3637008M1	2	Screw	
17	3638132M1	1	Hose	
18	3638598M1	1	Clip	
19	3638598M1	1	Clip	
20	3640697M1	1	Screw	
21	3638672M1	1	Hose	
22	3638807M1	1	Clip	
23	3638807M1	1	Clip	
24	375782X1	1	Nut	
25	375837X1	1	Sleeve	
26	731654M1	1	Union	
27	3637044M1	1	Screw	

Y-0572-11M-A

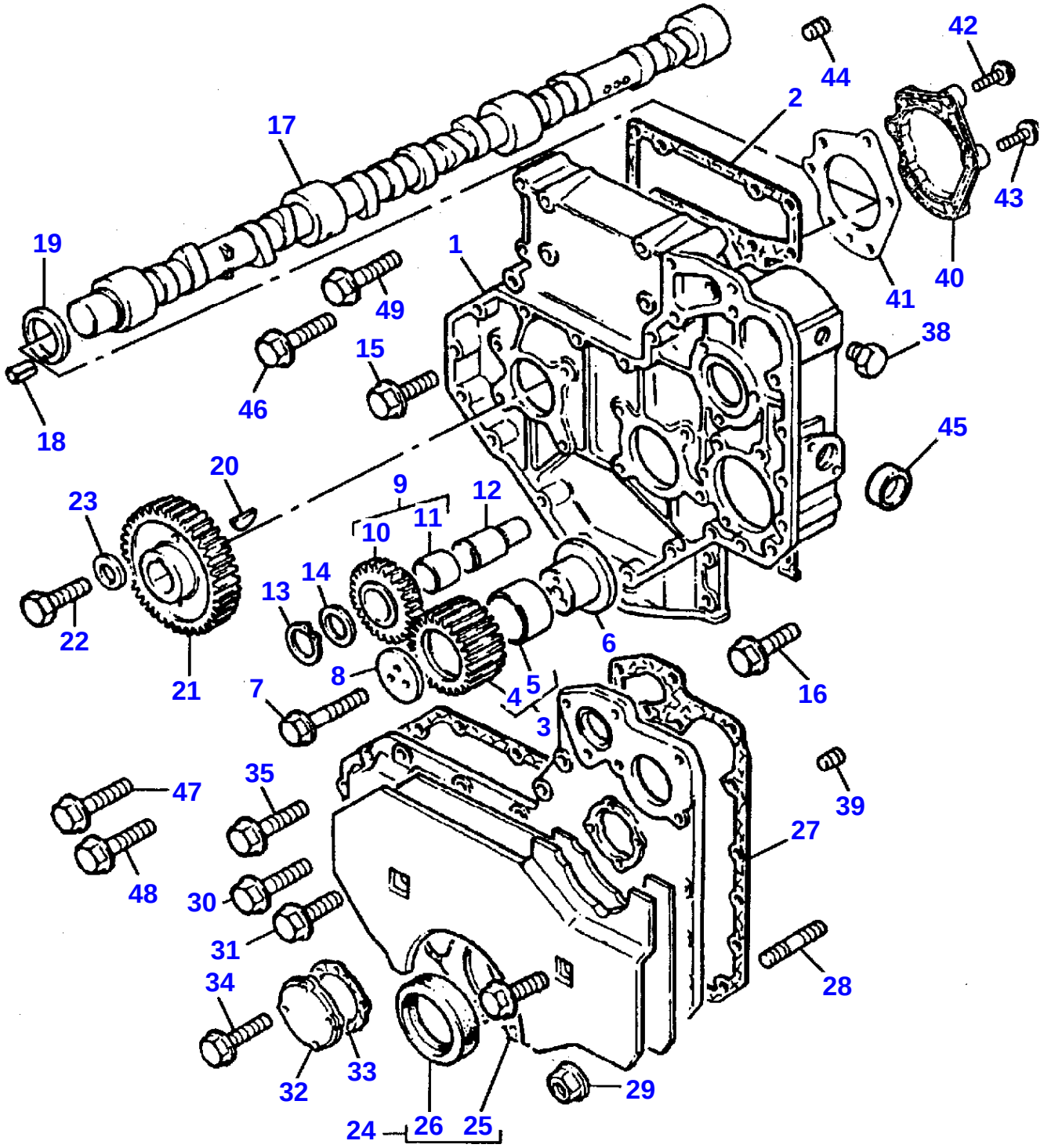
1
2
3
4
5
6
7
8
9
10
11
12
13
14
15
16
17
18
19
20
21
22
23
24
25
26
27
28
29
30
31
32
33
34
35
38
39
40
41
42
43
44
45
46
47
48
49

Download the full PDF manual instantly.

Our customer service e-mail:

aservicemanualpdf@yahoo.com