9802/7060 R1-3-1 BLOCK ASSEMBLY RE BUILD

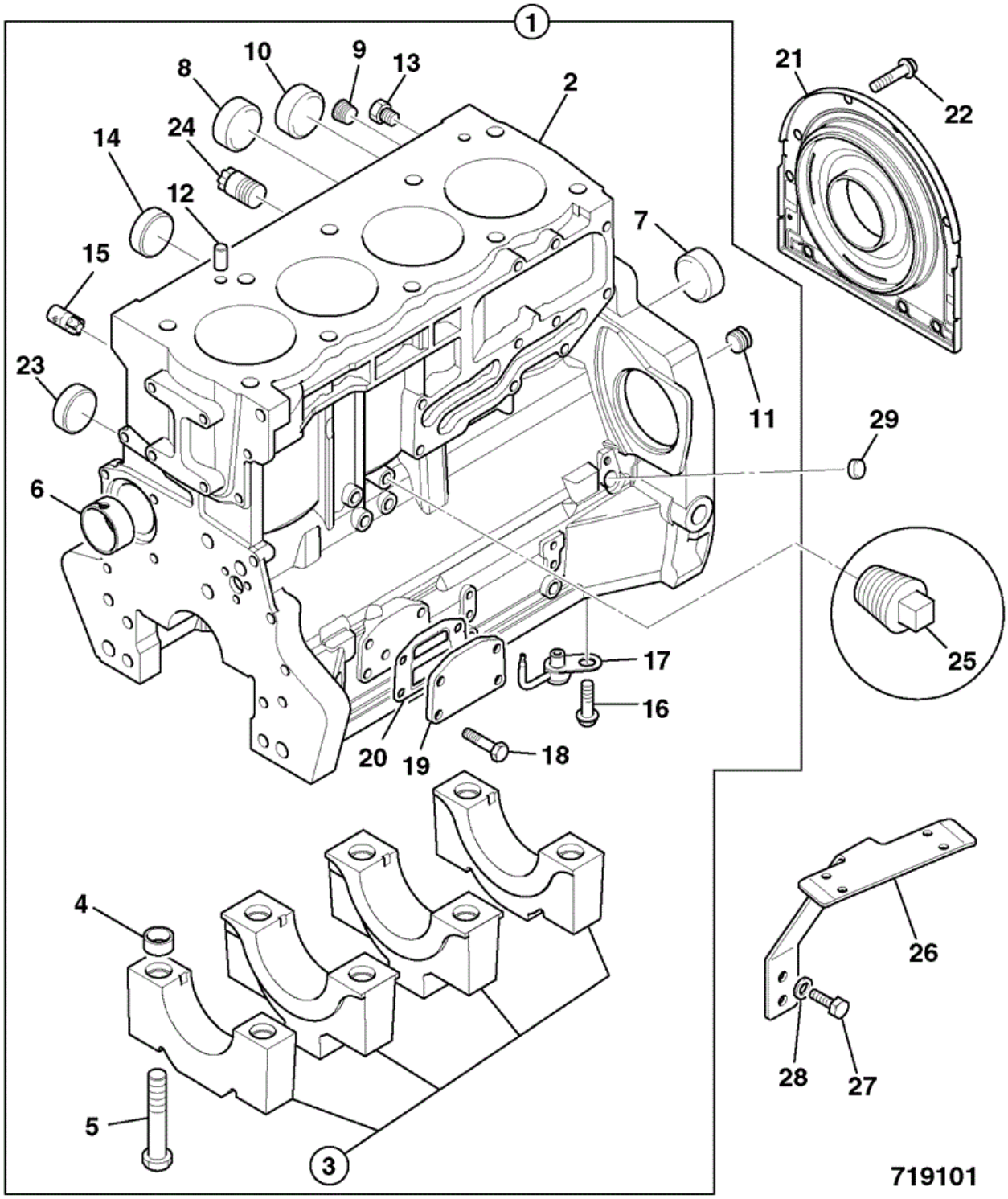

Item	Part #	Change No	Description	Usage Code	QTY
1	02/202900		Block cylinder assembly		1
2	****		None serviced part		1

3	****		None serviced part		1
4	:02/100101		Thimble		10
5	:02/100102		Bolt		10
6	:02/202901		Bush camshaft		1
7	:02/202902		Plug		1
8	:02/202903		Plug		2
9	:02/100134		Plug		1
10	:02/100396		Plug core D=32mm		1
11	:02/202904		Plug		1
12	:02/201818		Dowel		2
13	:02/202905		Plug		2
14	:02/202906		Plug		1
15	02/202907		Plug		1
16	:02/291178		Screw		4
17	:02/202908		Jet piston cooling		4
18	:02/291032		Bolt M8 x 20mm		4
19	:02/202909		Plate blanking		1
20	:02/202931		Gasket oil filter head to cyl/block		1
21	02/202935		Housing & rear oil seal assembly		1
22	826/10721		Bolt torx head drive		10
23	02/202961		Plug		1
24	02/202997		Plug		1
25	826/00765		Plug		1
26	331/32314		Bracket engine harness support		1
27	1315/0301Z		Screw Hexagon M8 X 12mm		2
28	1420/0007Z		Washer (M8)		2
29	02/202961		Plug		1

9802/7060 R1-3-2 BLOCK ASSEMBLY RG BUILD

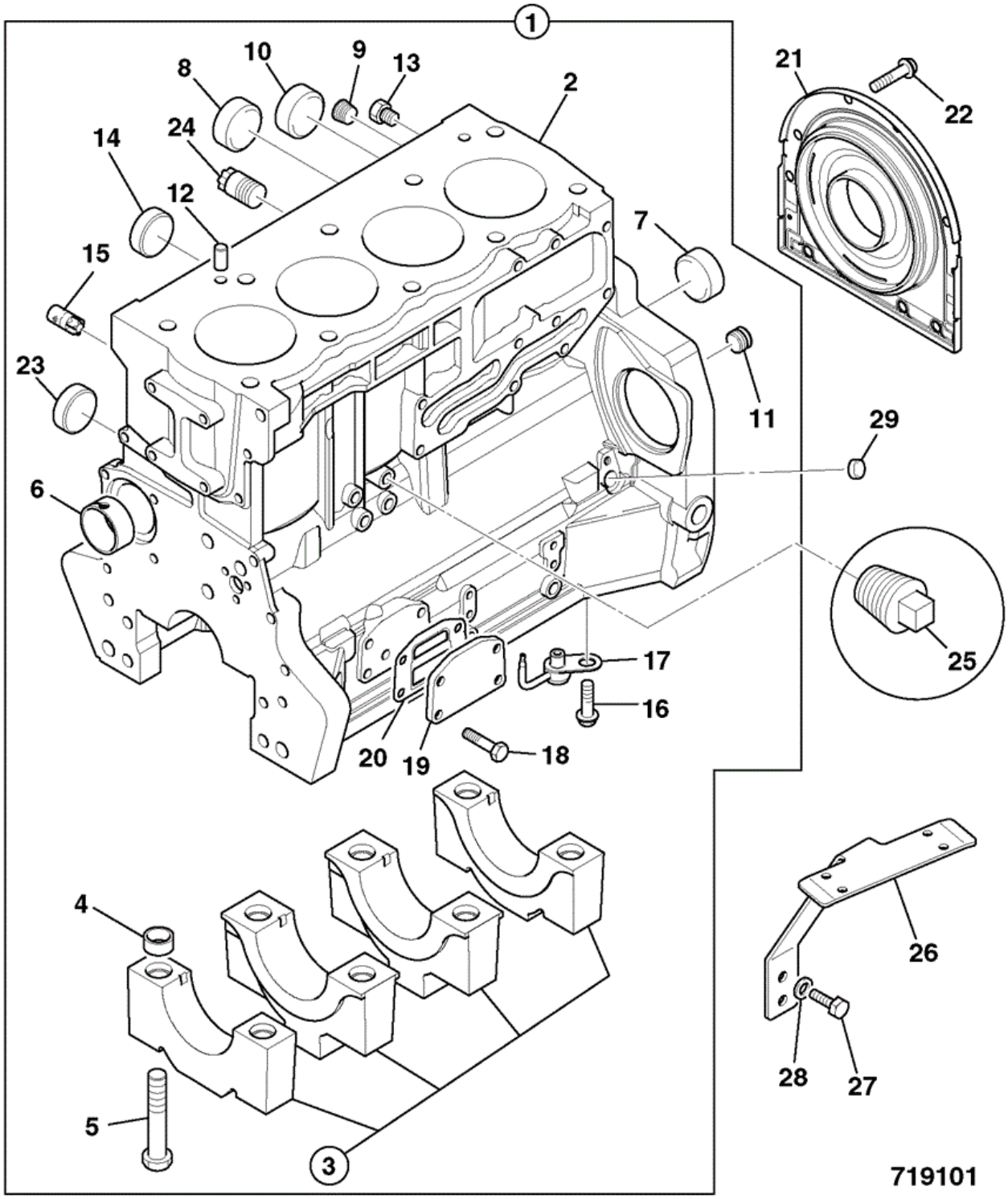

Item	Part #	Change No	Description	Usage Code	QTY
1	02/202900		Block cylinder assembly		1
2	****		None serviced part		1

3	****		None serviced part		1
4	:02/100101		Thimble		10
5	:02/100102		Bolt		10
6	:02/202901		Bush camshaft		1
7	:02/202902		Plug		1
8	:02/202903		Plug		2
9	:02/100134		Plug		1
10	:02/100396		Plug core D=32mm		1
11	:02/202904		Plug		1
12	:02/201818		Dowel		2
13	:02/202905		Plug		2
14	:02/202906		Plug		1
15	02/202907		Plug		1
16	:02/291178		Screw		4
17	:02/202908		Jet piston cooling		4
18	:02/291032		Bolt M8 x 20mm		4
19	:02/202909		Plate blanking		1
20	:02/202931		Gasket oil filter head to cyl/block		1
21	02/202935		Housing & rear oil seal assembly		1
22	826/10721		Bolt torx head drive		10
23	02/202961		Plug		1
24	02/202997		Plug		1
25	826/00765		Plug		1
26	331/32314		Bracket engine harness support		1
27	1315/0301Z		Screw Hexagon M8 X 12mm		2
28	1420/0007Z		Washer (M8)		2
29	02/202961		Plug		1

9802/7060 R1-4-1 CRANKSHAFT, BEARINGS PISTONS & CON-RODS RE BUILD

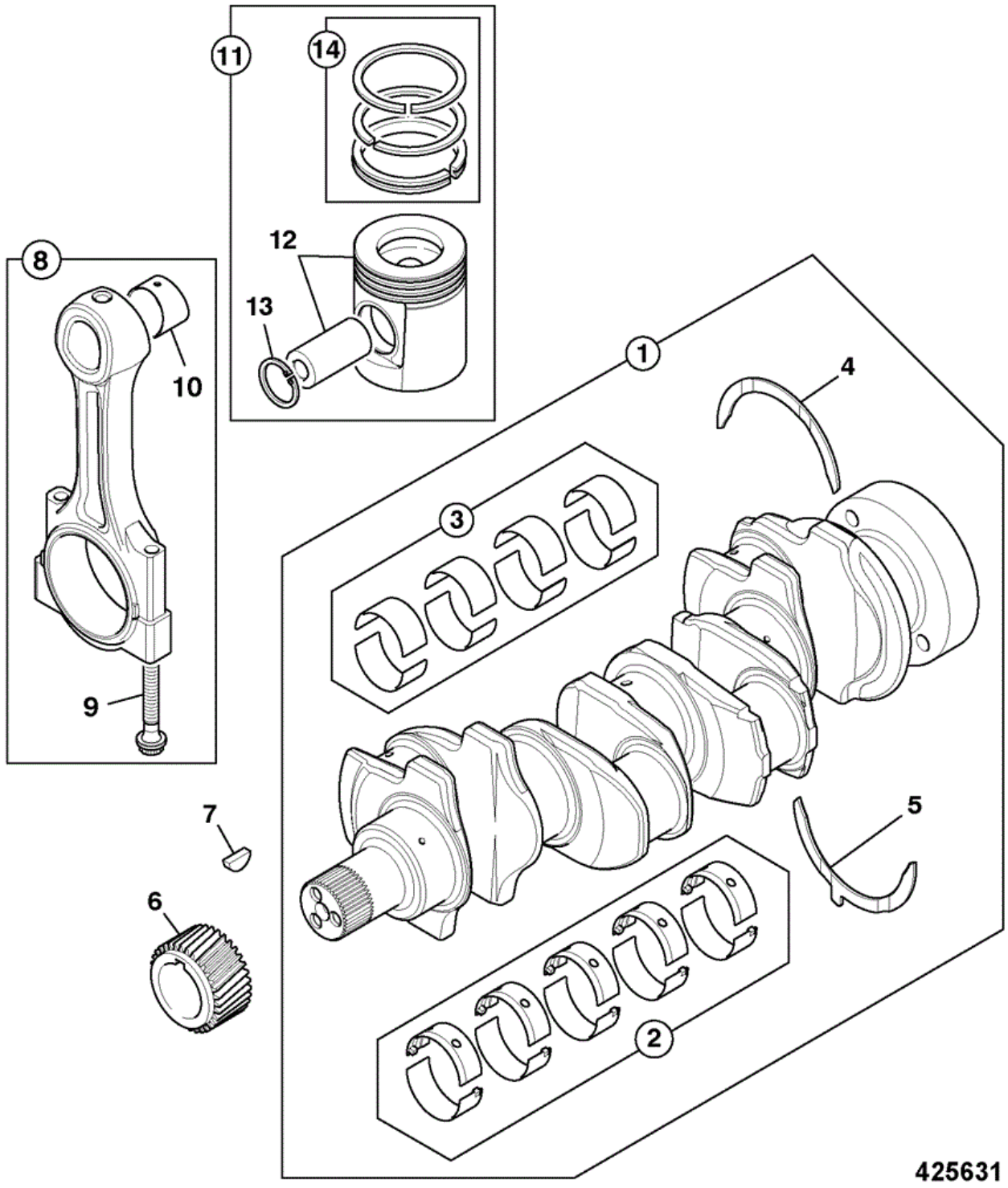

Item	Part #	Change No	Description	Usage Code	QTY
1	02/203091	Superseded	Crankshaft assembly		1

1	02/202910		Crankshaft assembly		1
2	:02/202911		Kit-main bearing standard		1
2	02/202912		Kit-main bearing u/s 0.25mm		1
2	02/202913		Kit-main bearing u/s 0.50mm		1
2	02/202914		Kit-main bearing undersize (+)0.030"		1
2A	02/203172		Kit-main bearing standard oversize		0
2A	02/203173		Kit-main bearing oversize - 0.25mm		0
2A	02/203174		Kit-main bearing oversize - 0.50mm		0
2A	02/203175		Kit-main bearing oversize - 0.75mm		0
3	:02/202915		Kit-big end bearing standard		1
3	02/202916		Kit-big end bearing oversize - (+)0.010"		1
3	02/202917		Kit-big end bearing u/s 0.50mm		1
3	02/202918		Kit-big end bearing oversize - (+)0.030"		1
3A	02/203251		Kit-big end bearing Standard		0
3A	02/203252		Kit-big end bearing undersize (-)0.010"		0
3A	02/203253		Kit-big end bearing undersize (-)0.020"		0
3A	02/203254		Kit-big end bearing undersize (-)0.030"		0
4	:02/192083		Washer thrust top - standard		2
4	02/192011		Washer thrust top-oversize 0.19mm		2
5	:02/192084		Washer thrust bottom - standard		2
5	02/192013		Washer thrust btm-oversize 0.19mm		2
6	02/202919		Gear crankshaft		1
7	02/100038		Key		1
8	02/202922		Kit-conrod grade 'F' RED		4
8	02/202923		Kit-conrod grade 'G' ORANGE		4
8	02/202924		Kit-conrod grade 'H' WHITE		4
8	02/202925		Kit-conrod grade 'J' GREEN		4
8	02/202926		Kit-conrod grade 'K' PURPLE		4
8	02/202927		Kit-conrod grade 'L' BLUE		4
9	:02/202929		Bolt conrod		2
10	:02/202928		Bush small end		1
11	02/203092		Kit-piston		4
11	02/203205		Kit-piston & ring oversize 0.5mm		0
11	02/203206		Kit-piston & ring oversize 1.0mm		0
12	****		None serviced part		1
13	:02/201151		Circlip		21
14	:02/203093		Kit-piston ring		1

9802/7060 R1-4-2 CRANKSHAFT, BEARINGS PISTONS & CON-RODS RG BUILD

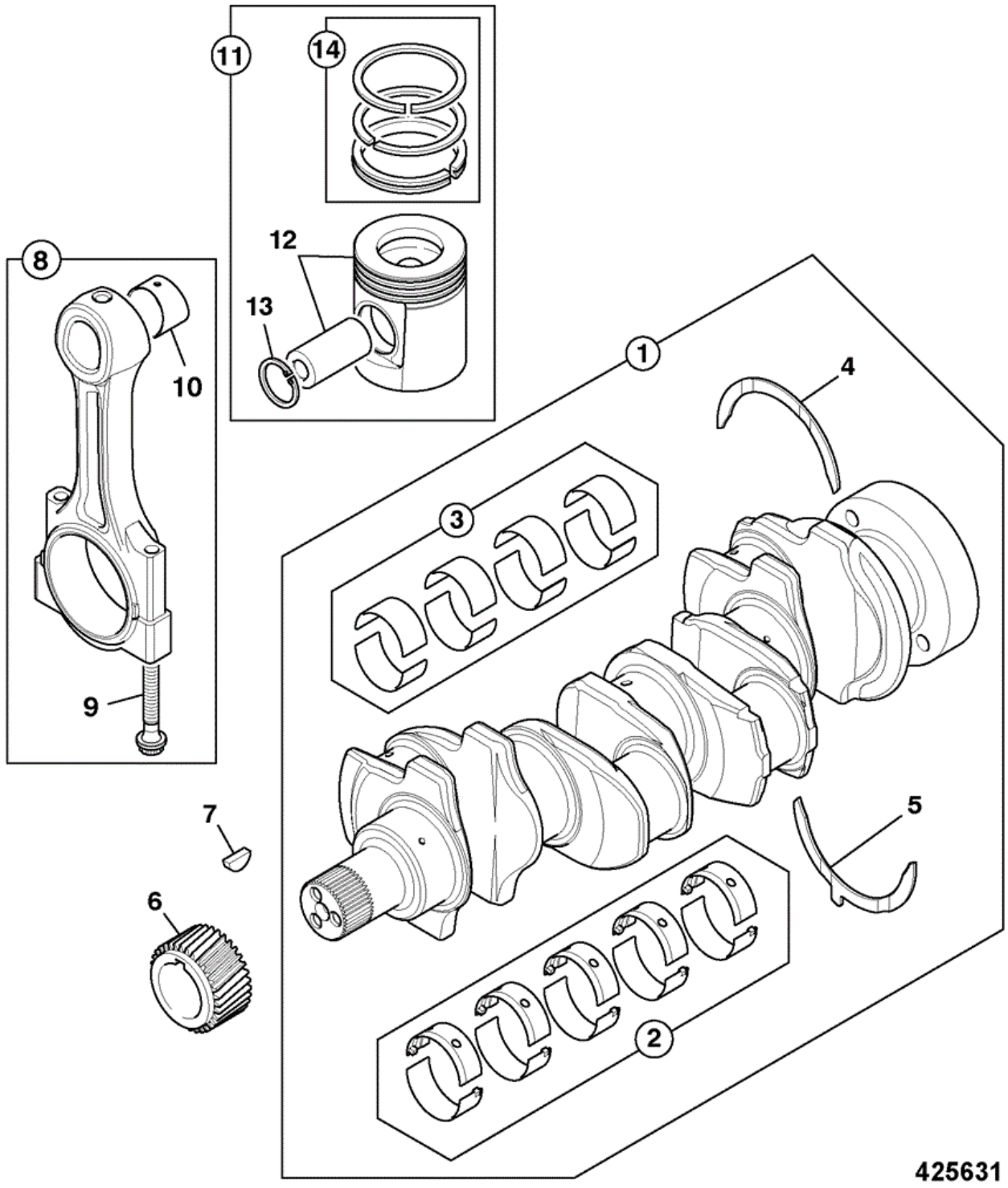

Item	Part #	Change No	Description	Usage Code	QTY
1	02/202910		Crankshaft assembly		1

2	:02/202911		Kit-main bearing standard		1
2	02/202912		Kit-main bearing u/s 0.25mm		0
2	02/202913		Kit-main bearing u/s 0.50mm		0
2	02/202914		Kit-main bearing undersize (+)0.030"		0
2A	02/203172		Kit-main bearing standard oversize		0
2A	02/203173		Kit-main bearing oversize - 0.25mm		0
2A	02/203174		Kit-main bearing oversize - 0.50mm		0
2A	02/203175		Kit-main bearing oversize - 0.75mm		0
3	:02/202915		Kit-big end bearing standard		1
3	02/202916		Kit-big end bearing oversize - (+)0.010"		0
3	02/202917		Kit-big end bearing u/s 0.50mm		0
3	02/202918		Kit-big end bearing oversize - (+)0.030"		1
3A	02/203251		Kit-big end bearing Standard		0
3A	02/203252		Kit-big end bearing undersize (-)0.010"		0
3A	02/203253		Kit-big end bearing undersize (-)0.020"		0
3A	02/203254		Kit-big end bearing undersize (-)0.030"		0
4	:02/192083		Washer thrust top - standard		2
4	02/192011		Washer thrust top-oversize 0.19mm		0
5	:02/192084		Washer thrust bottom - standard		2
5	02/192013		Washer thrust btm-oversize 0.19mm		0
6	02/202919		Gear crankshaft		1
7	02/100038		Key		1
8	02/202922		Kit-conrod grade 'F' RED		4
8	02/202923		Kit-conrod grade 'G' ORANGE		0
8	02/202924		Kit-conrod grade 'H' WHITE		0
8	02/202925		Kit-conrod grade 'J' GREEN		0
8	02/202926		Kit-conrod grade 'K' PURPLE		0
8	02/202927		Kit-conrod grade 'L' BLUE		0
9	:02/202929		Bolt conrod		2
10	:02/202928		Bush small end		1
11	02/202920		Kit-piston & rings		4
11	02/203221		Kit-piston & rings oversize 0.5mm		0
11	02/203223		Kit-piston & rings oversize 1.0mm		0
12	****		None serviced part		1
13	:02/201151		Circlip		2
14	:02/202921		Kit-piston ring		1

9802/7060 R1-5-1 FANS, PULLEYS & FAN BELT RE BUILD

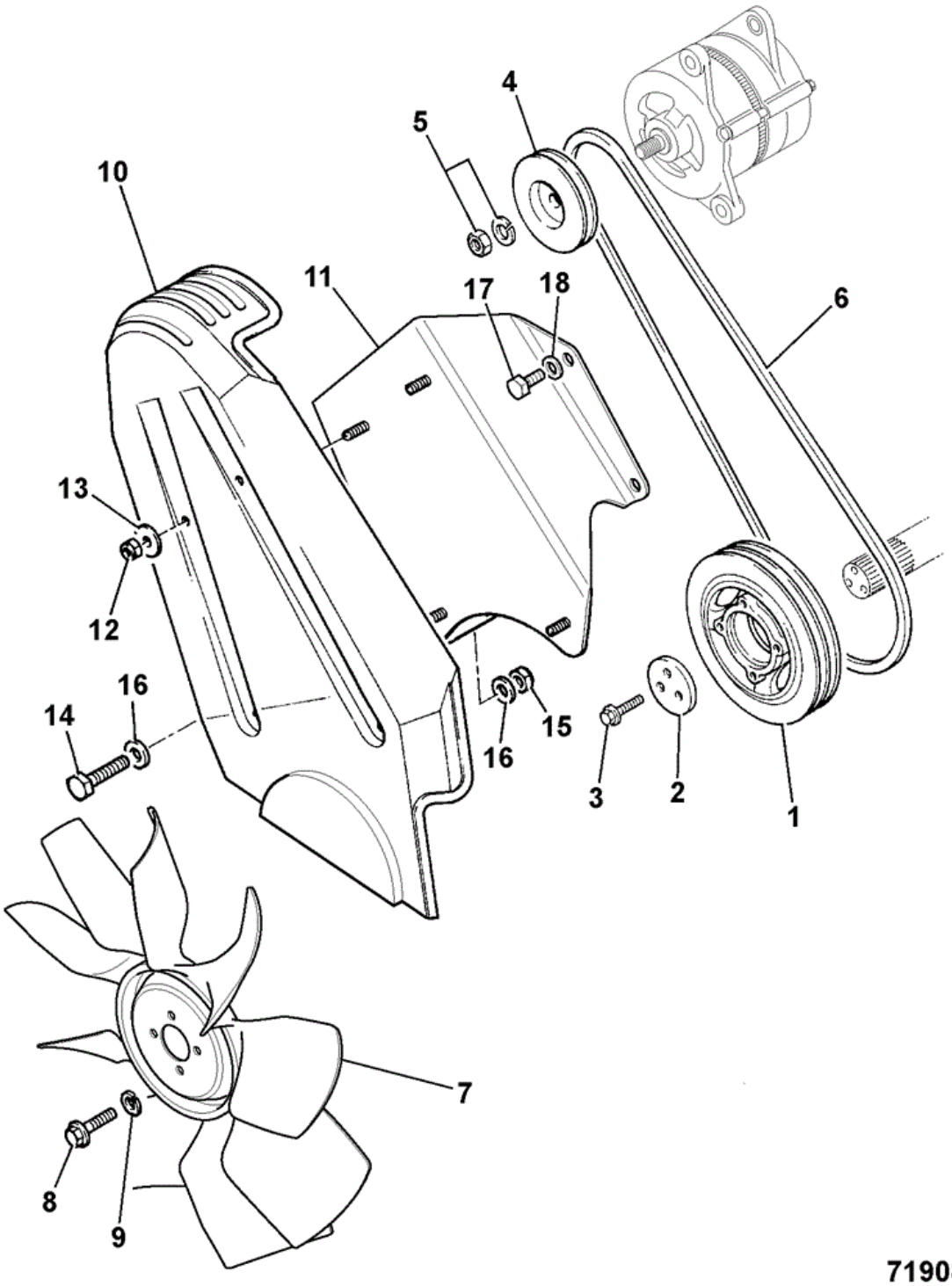

Item	Part #	Change No	Description	Usage Code	QTY
1	02/200018		Pulley crankshaft twin groove		1
2	02/200017		Block Thrust		1

3	02/100579		Screw		3
4	02/202443		Pulley alternator D=86mm twin groove		1
5	714/20405		Kit-sundry parts		1
6	02/203141		Belt fan (pair)		1
7	30/925525		Fan 22"(558mm) cooling 9 blade *See Note 1*		1
7A	331/52882		Plate fan hub spreader		1
8	1305/0105Z		Bolt		1
9	1416/0005Z		Washer spring - 5/16" Zinc plated		1
10	162/03597		Guard alternator		1
11	335/04743		Bracket mounting pulley cover		1
12	826/01728		Nut nyloc		4
13	1412/0001Z		Washer 1/4" Large		4
14	1315/3716Z		Bolt M16 x 70mm		1
15	1370/0603Z		Nut lock M16		1
16	1420/0011Z		Washer (M16)		2
17	1315/0405Z		Setscrew M10 x 20 mm		2
18	1420/0008Z		Washer (M10)		2

Note 1: When replacing this Fan, Spreader item number 7A must also be fitted.

9802/7060 R1-5-2 FANS, PULLEYS & FAN BELT RG BUILD

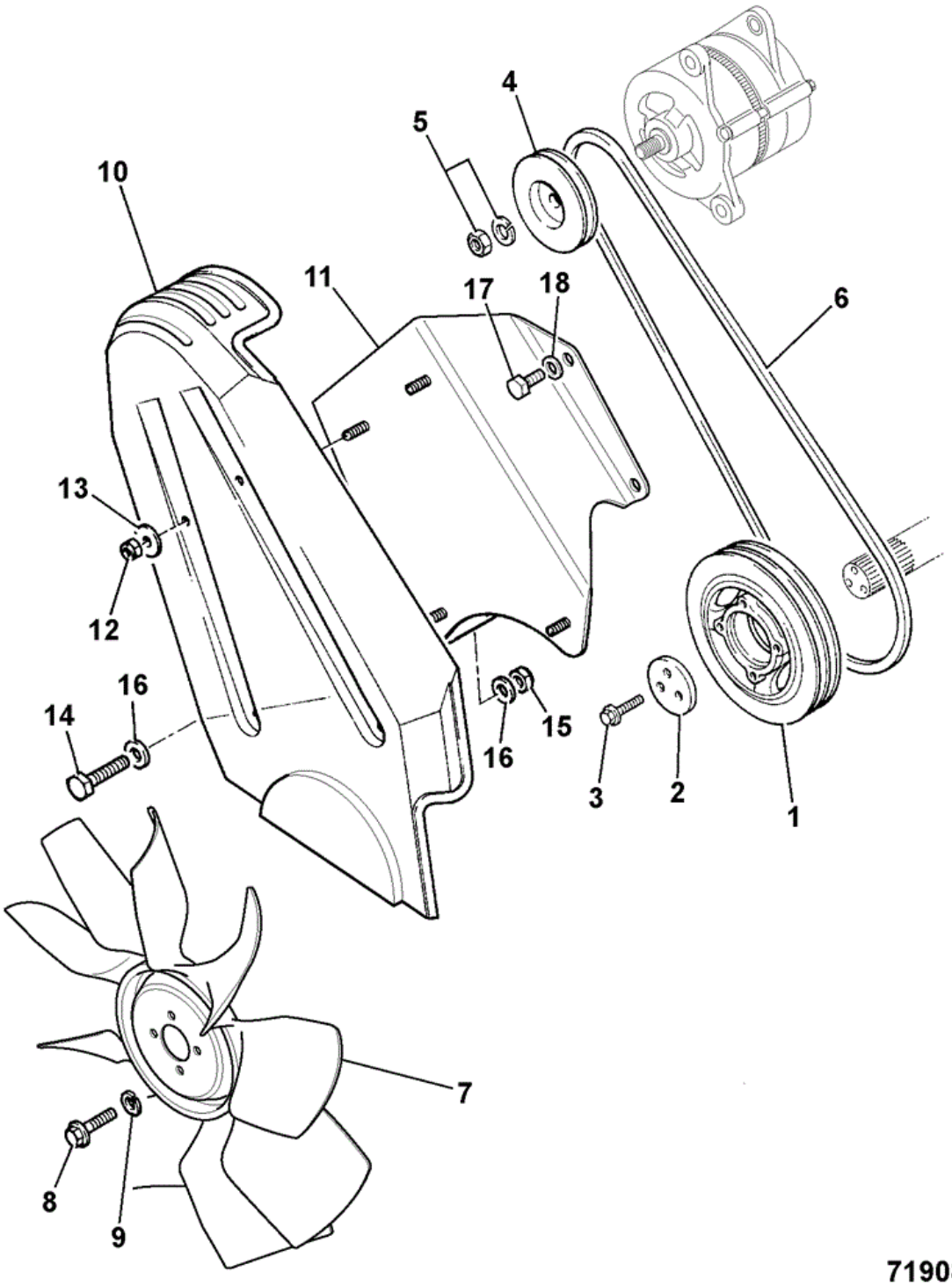

Item	Part #	Change No	Description	Usage Code	QTY
1	02/200018		Pulley crankshaft twin groove		1
2	02/200017		Block Thrust		1

3	02/100579		Screw		3
4	02/202443		Pulley alternator D=86mm twin groove		1
5	714/20405		Kit-sundry parts		1
6	02/203141		Belt fan (pair)		1
7	30/925525		Fan 22"(558mm) cooling 9 blade *See Note 1*		1
7A	331/52882		Plate fan hub spreader		1
8	1305/0105Z		Bolt		1
9	1416/0005Z		Washer spring - 5/16" Zinc plated		1
10	162/03597		Guard alternator		1
11	335/04743		Bracket mounting pulley cover		1
12	826/01728		Nut nyloc		4
13	1412/0001Z		Washer 1/4" Large		4
14	1315/3716Z		Bolt M16 x 70mm		1
15	1370/0603Z		Nut lock M16		1
16	1420/0011Z		Washer (M16)		2
17	1315/0405Z		Setscrew M10 x 20 mm		2
18	1420/0008Z		Washer (M10)		2

Note 1: When replacing this Fan, Spreader item number 7A must also be fitted.

9802/7060 R1-6-1 TIMING CASE CAMSHAFT & GEARS RE BUILD

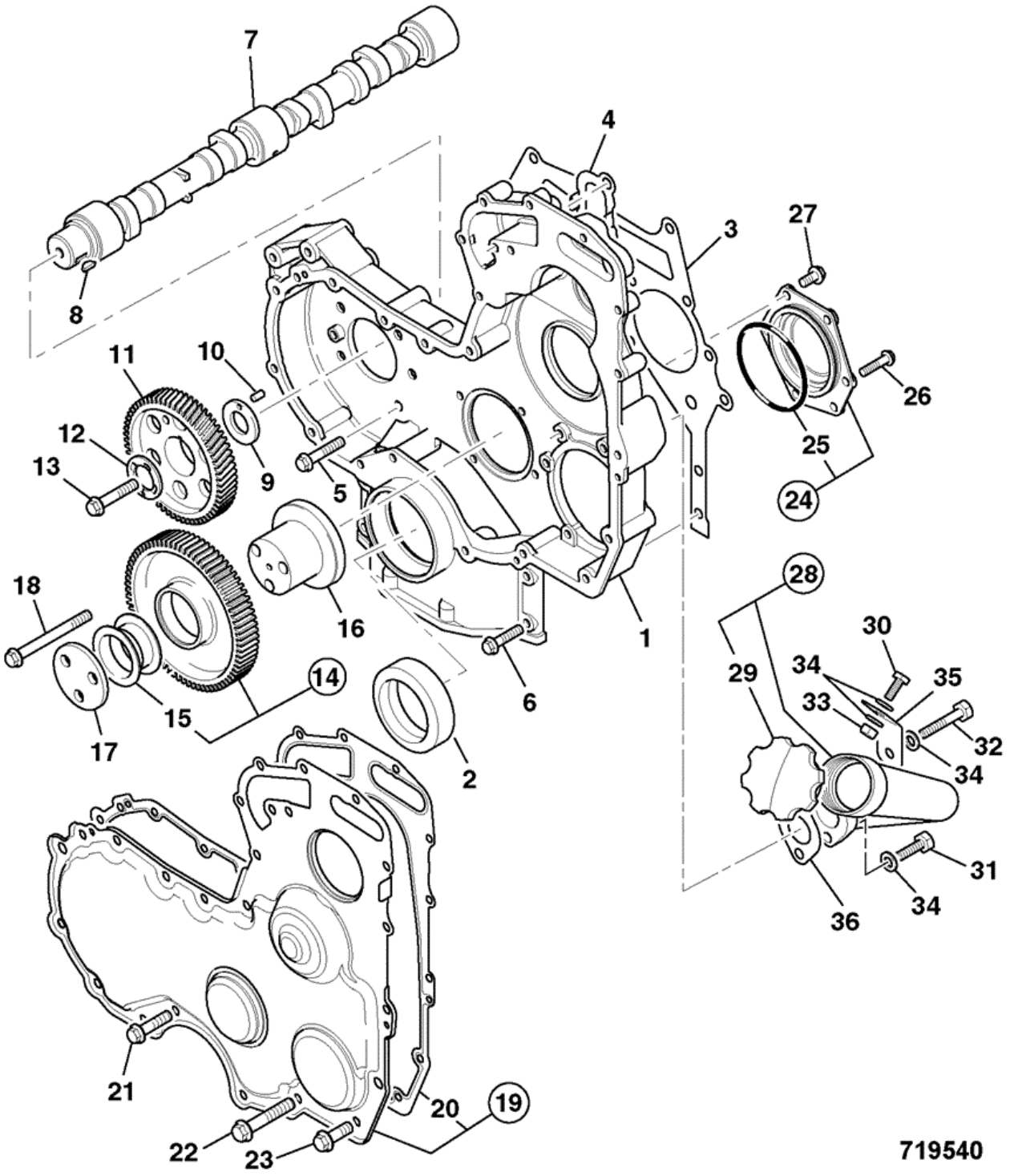

Item	Part #	Change No	Description	Usage Code	QTY
1	02/203050		Casing timing		1

2	02/101435		Seal front oil		1
3	02/202984		Gasket timing case to block		1
4	02/202983		Gasket timing case		1
5	826/00869		Screw flange head		8
6	02/291033		Bolt		4
7	02/202958		Camshaft		1
8	02/100038		Key		1
9	02/291065		Washer		1
10	2102/0604		Dowel		1
11	02/203049		Gear camshaft		1
12	02/203047		Washer thrust		1
13	02/291196		Screw		1
14	02/203048		Gear idler		1
15	:02/192016		Bush		2
16	02/100041		Hub		1
17	02/201288		Plate		1
18	02/291073		Screw		3
19	:02/202993		Cover timing		1
20	:02/202994		Gasket timing cover		1
21	02/291016		Screw		9
22	02/291025		Bolt (M8 x 65)		5
23	826/00901		Screw		1
24	02/202995		Plate blanking		1
25	:02/202996		O Ring		1
26	02/291031		Bolt		5
27	826/00901		Screw		1
28	01/180023		Filler lubricating oil assembly		1
29	02/201343		Cap oil filler		1
30	1315/0305Z		Setscrew M8 x 20		1
31	1318/0308Z		Bolt locking M8X30		1
32	1318/3314Z		Bolt locking M8X50		1
33	1370/0203Z		Nut Nut M8		1
34	1420/0007Z		Washer (M8)		4
35	331/40191		Bracket dipstick tube		1
36	813/10253		Gasket		1

9802/7060 R1-6-2 TIMING CASE CAMSHAFT & GEARS RG BUILD

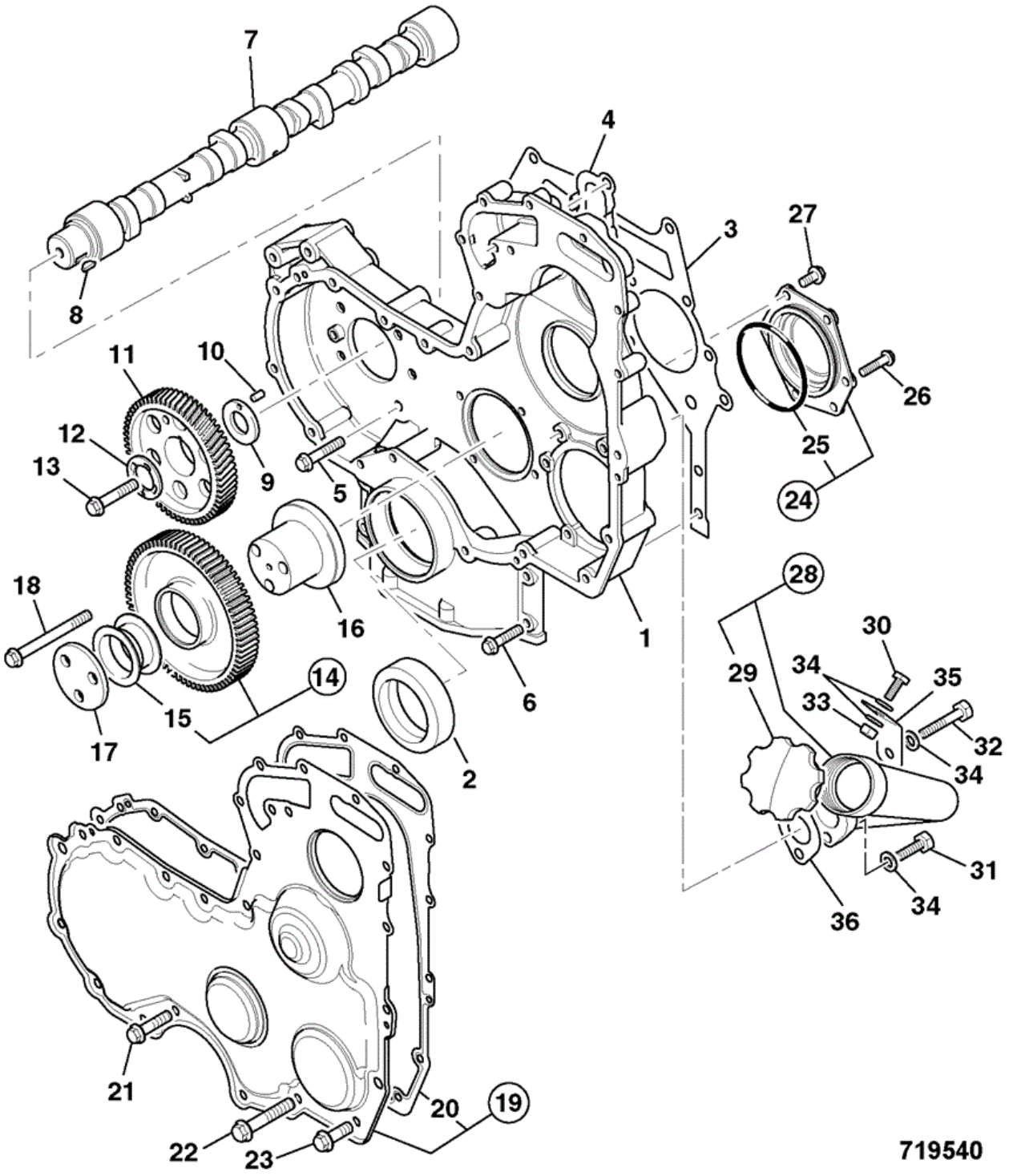

Item	Part #	Change No	Description	Usage Code	QTY
1	02/203050		Casing timing		1

Download the full PDF manual instantly.

Our customer service e-mail:

aservicemanualpdf@yahoo.com