9802/2635 P1-3-1 BLOCK ASSEMBLY RJ BUILD

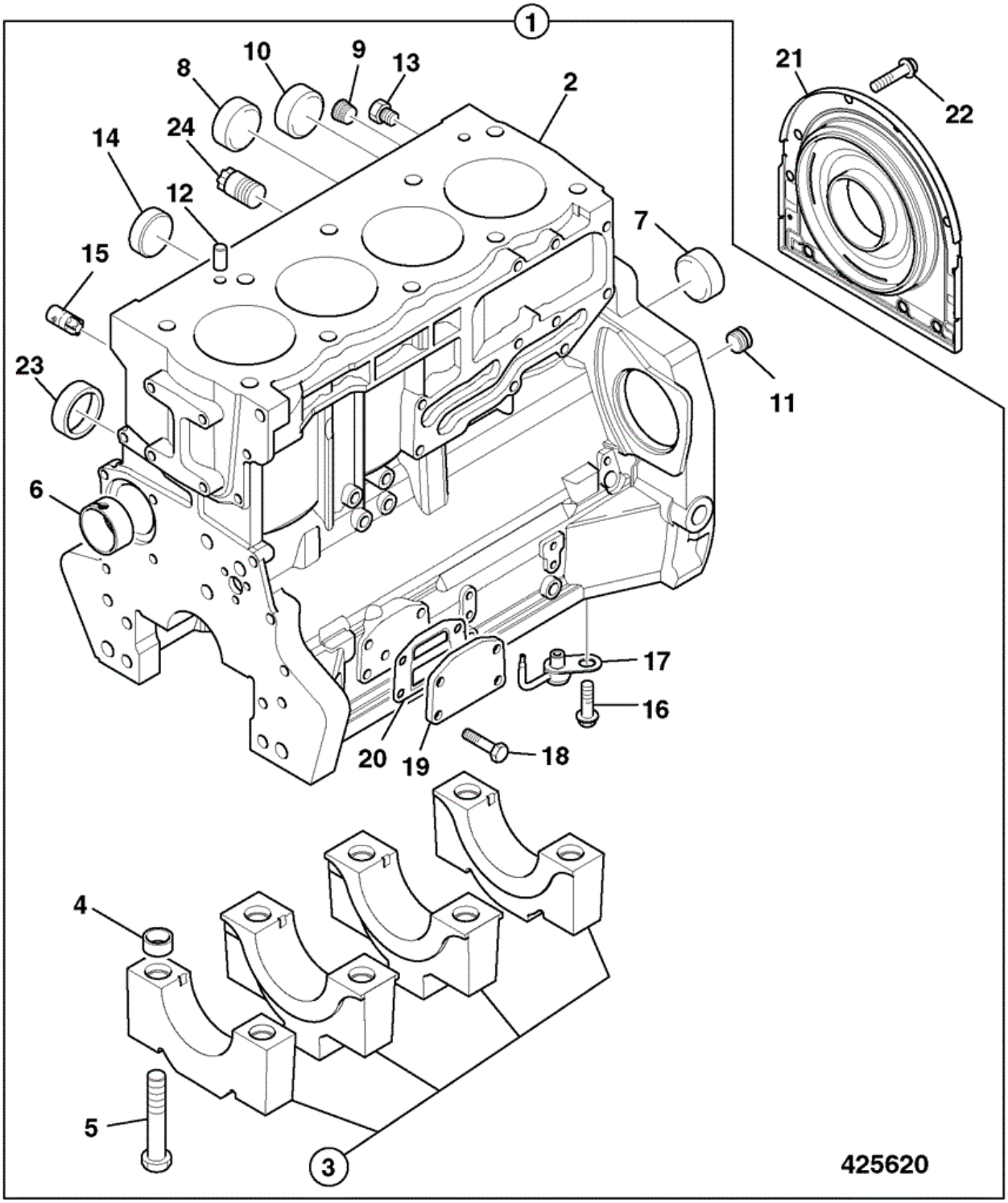

Item	Part #	Change No	Description	Usage Code	QTY
1	02/202900		Block cylinder assembly		1
2	****		None serviced part		1
3	****		None serviced part		1

4	:02/100101		Thimble		10
5	:02/100102		Bolt		10
6	:02/202901		Bush camshaft		1
7	:02/202902		Plug		1
8	:02/202903		Plug		2
9	:02/100134		Plug		1
10	:02/100396		Plug core D=32mm		1
11	:02/202904		Plug		1
12	:02/201818		Dowel		2
13	:02/202905		Plug		2
14	:02/202906		Plug		1
15	02/202907		Plug		1
16	:02/291178		Screw		4
17	:02/202908		Jet piston cooling		4
18	:02/291032		Bolt M8 x 20mm		4
19	:02/202909		Plate blanking		1
20	:02/202931		Gasket oil filter head to cyl/block		1
21	02/202935		Housing & rear oil seal assembly		1
22	826/10721		Bolt torx head drive		8
23	02/202961		Plug		1
24	02/203060		Plug		1
25	826/00765		Plug		1

9802/2635 P1-4-1 CRANKSHAFT, BEARINGS PISTONS & CON-RODS RJ BUILD

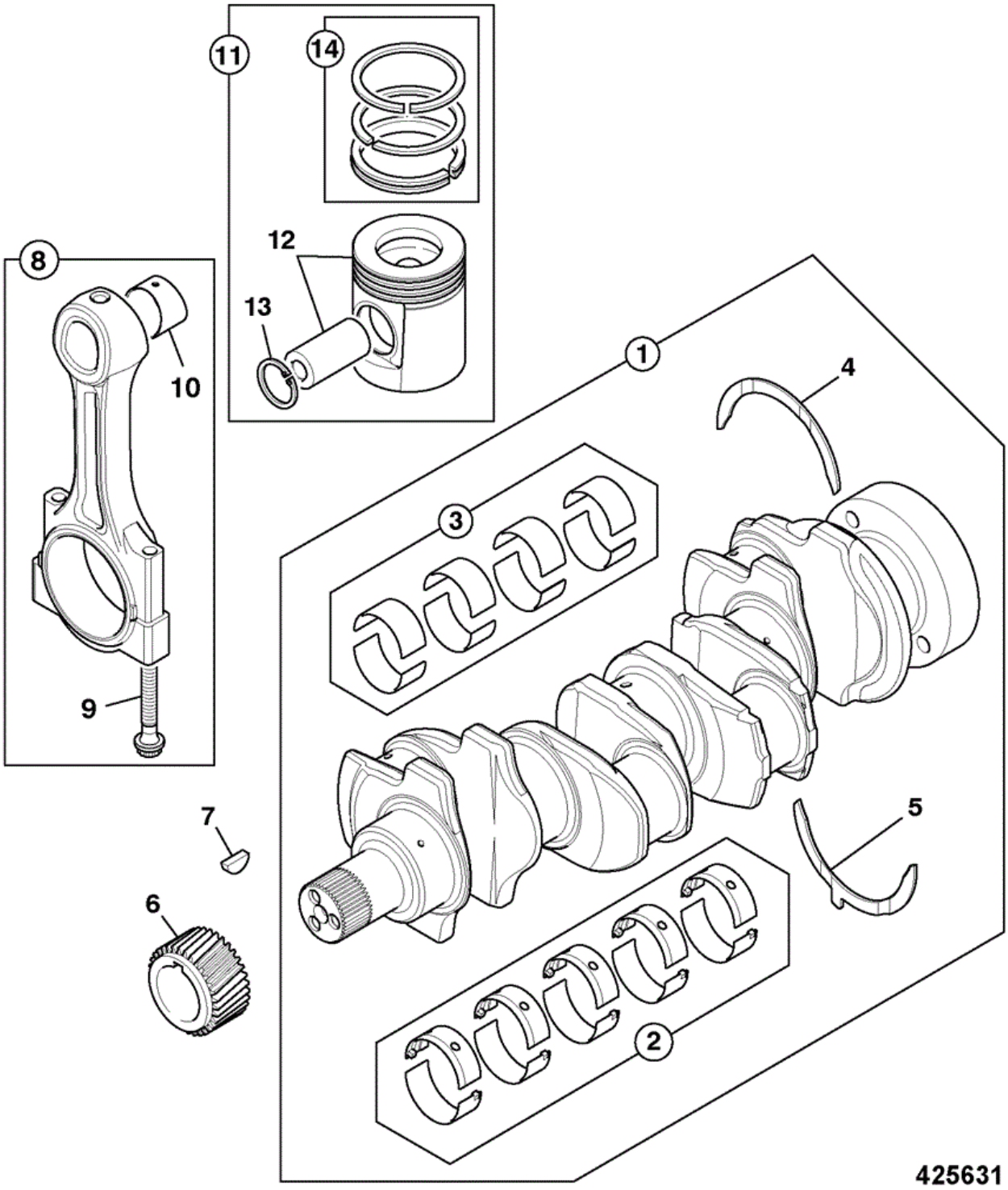

Item	Part #	Change No	Description	Usage Code	QTY
1	02/202910		Crankshaft assembly		1

2	:02/202911		Kit-main bearing standard		1
2	02/202912		Kit-main bearing u/s 0.25mm		0
2	02/202913		Kit-main bearing u/s 0.50mm		0
2	02/202914		Kit-main bearing undersize (+)0.030"		0
2A	02/203172		Kit-main bearing standard oversize		0
2A	02/203173		Kit-main bearing oversize - 0.25mm		0
2A	02/203174		Kit-main bearing oversize - 0.50mm		0
2A	02/203175		Kit-main bearing oversize - 0.75mm		0
3	:02/202915		Kit-big end bearing standard		1
3	02/202916		Kit-big end bearing oversize - (+)0.010"		0
3	02/202917		Kit-big end bearing u/s 0.50mm		0
3	02/202918		Kit-big end bearing oversize - (+)0.030"		1
3A	02/203251		Kit-big end bearing Standard		0
3A	02/203252		Kit-big end bearing undersize (-)0.010"		0
3A	02/203253		Kit-big end bearing undersize (-)0.020"		0
3A	02/203254		Kit-big end bearing undersize (-)0.030"		0
4	:02/192083		Washer thrust top - standard		2
4	02/192011		Washer thrust top-oversize 0.19mm		0
5	:02/192084		Washer thrust bottom - standard		2
5	02/192013		Washer thrust btm-oversize 0.19mm		0
6	02/202919		Gear crankshaft		1
7	02/100038		Key		1
8	02/202922		Kit-conrod grade 'F' RED		4
8	02/202923		Kit-conrod grade 'G' ORANGE		0
8	02/202924		Kit-conrod grade 'H' WHITE		0
8	02/202925		Kit-conrod grade 'J' GREEN		0
8	02/202926		Kit-conrod grade 'K' PURPLE		0
8	02/202927		Kit-conrod grade 'L' BLUE		0
9	:02/202929		Bolt conrod		1
10	:02/202928		Bush small end		2
11	02/202920		Kit-piston & rings		4
11	02/203221		Kit-piston & rings oversize 0.5mm		0
11	02/203223		Kit-piston & rings oversize 1.0mm		0
12	****		None serviced part		1
13	:02/201151		Circlip		2
14	:02/202921		Kit-piston ring		1

9802/2635 P1-5-1 FANS, PULLEYS & FAN BELT RJ BUILD

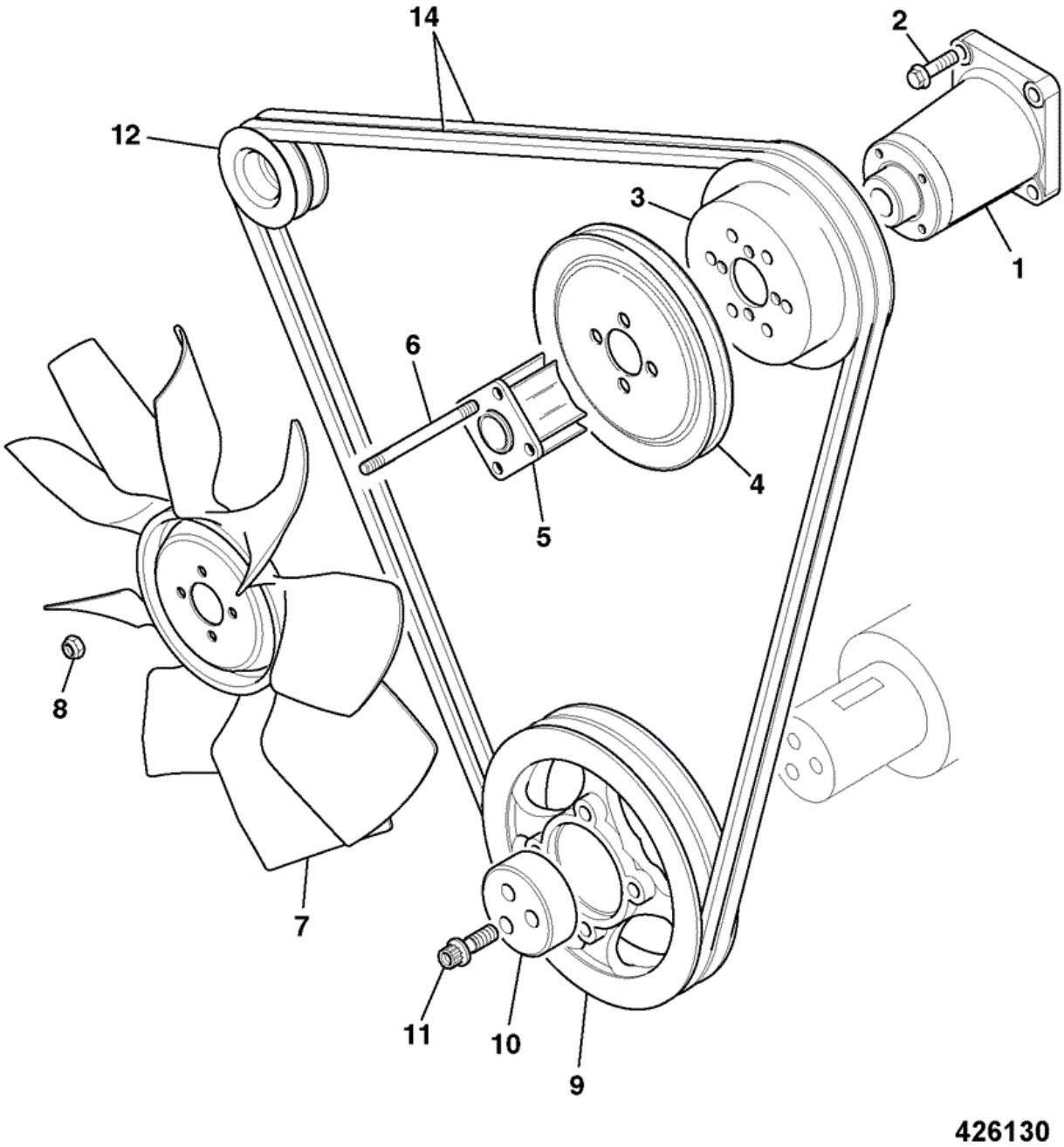

Item	Part #	Change No	Description	Usage Code	QTY
1	02/202962		Housing fan drive assembly		1
2	02/291096		Screw		4
3	02/201329		Pulley fan twin groove, 205mm		1

4	02/201345		Pulley fan drive, single auxiliary		1
5	02/201347		Spacer fan 76.2mm		1
6	02/291204		Stud		4
7	30/925560		Fan cooling 24"		1
8	1370/0203Z		Nut Nut M8		4
9	02/200877		Pulley crankshaft twin groove		1
10	02/200017		Block Thrust		1
11	02/100579		Screw		3
12	02/202444		Pulley alternator D=73mm twin groove		1
14	990/47900		Belt Drive - pair		1

9802/2635 P1-6-1 TIMING CASE CAMSHAFT & GEARS RJ BUILD

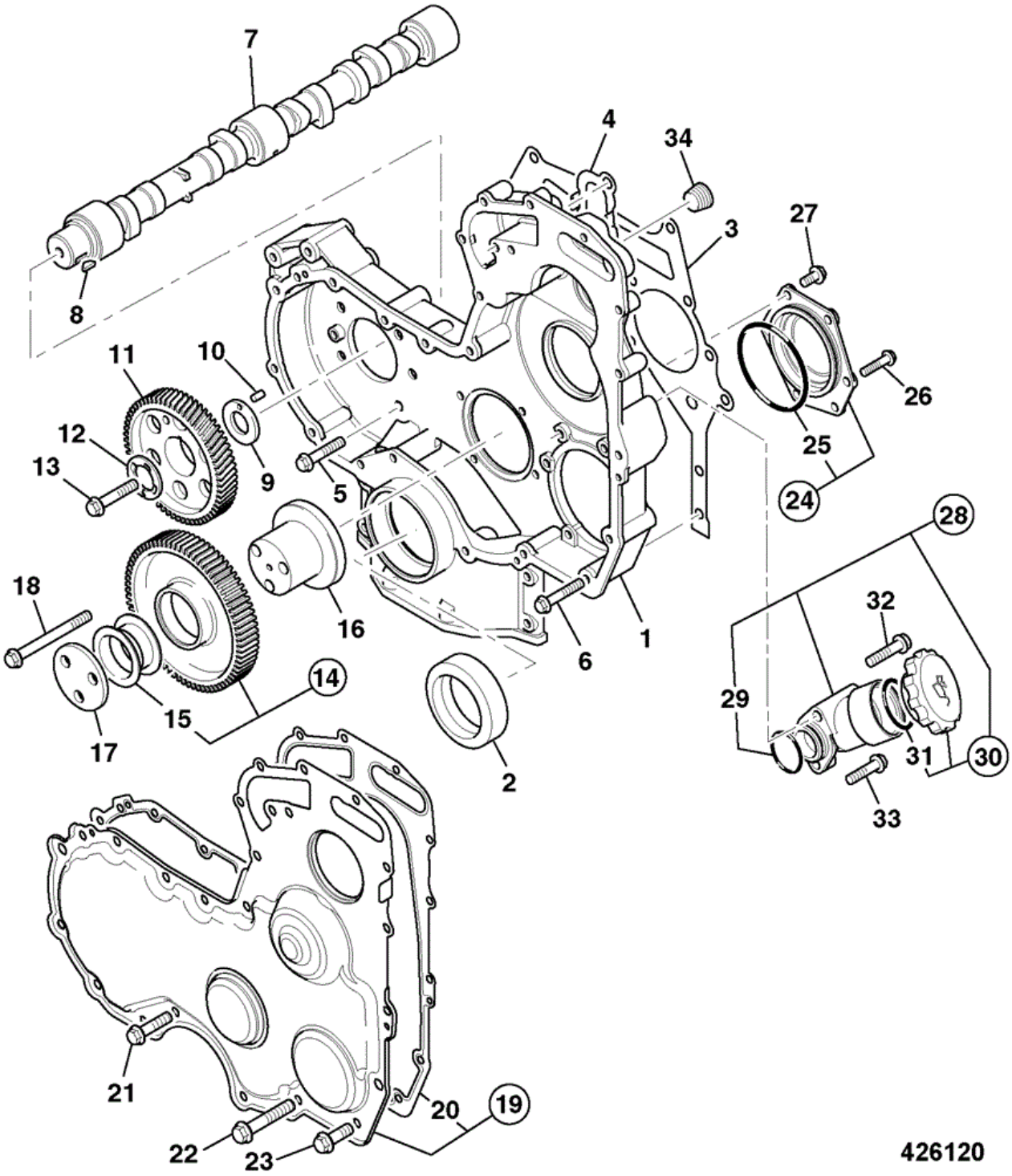

Item	Part #	Change No	Description	Usage Code	QTY
1	02/203050		Casing timing		1

2	02/101435		Seal front oil		1
3	02/202984		Gasket timing case to block		1
4	02/202983		Gasket timing case		1
5	826/00869		Screw flange head		8
6	02/291033		Bolt		4
7	02/202958		Camshaft		1
8	02/203049		Gear camshaft		1
9	02/100038		Key		1
10	02/291065		Washer		1
11	2102/0604		Dowel		1
12	02/203047		Washer thrust		1
13	02/291196		Screw		1
14	02/203048		Gear idler		1
15	:02/192016		Bush		2
16	02/100041		Hub		1
17	02/201288		Plate		2
18	02/291073		Screw		3
19	:02/202993		Cover timing		2
20	:02/202994		Gasket timing cover		1
21	02/291016		Screw		9
22	02/291025		Bolt (M8 x 65)		5
23	826/00901		Screw		1
24	02/202995		Plate blanking		1
25	:02/202996		O Ring		1
26	02/291031		Bolt		5
27	826/00901		Screw		1
28	02/203018		Filler lubricating oil assembly		1
29	:02/200135		O Ring		1
30	:02/201343		Cap oil filler		1
31	::02/201098		O Ring		1
32	02/291104		Screw		1
33	02/291018		Bolt		1
34	02/100095		Plug taper		1

9802/2635 P1-7-1 FLYWHEEL & HOUSING RJ BUILD

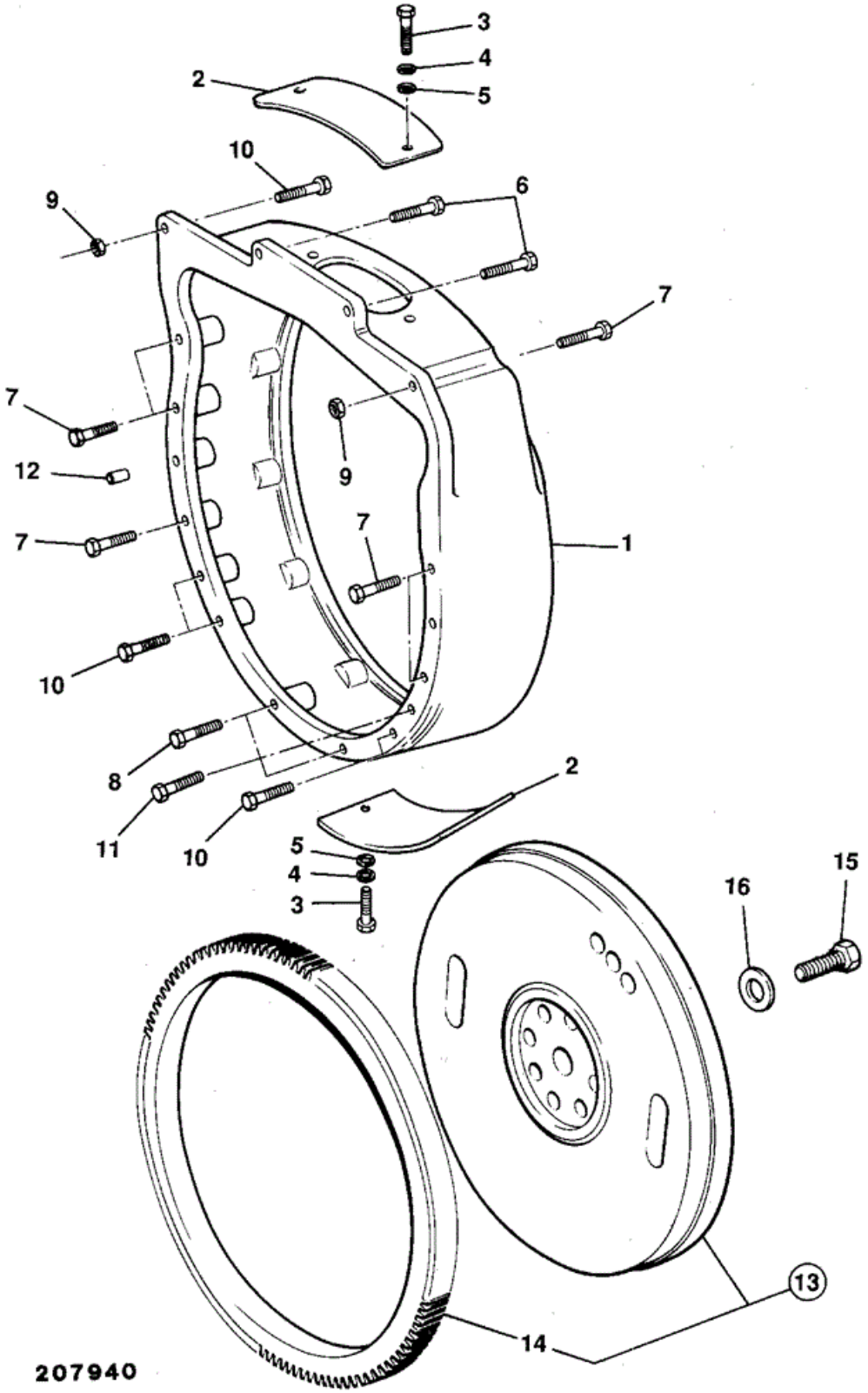

Item	Part #	Change No	Description	Usage Code	QTY
1	265/00195		Housing flywheel		1
2	259/27202		Plate cover - bottom		2
3	1315/0201D		Setscrew Set M6x12		4
4	1425/0006Z		Washer Spring (M6)		4
5	1420/0006D		Washer (M6)		4
6	1315/0509D		Screw M12x35mm		2
7	1315/3514D		Bolt M12 x 60mm long		6
8	1315/0511D		Setscrew M12 x 45mm		3
9	1370/0403D		Nut Lock M12		2
10	1315/3516D		Bolt M12x70		3
11	1315/3517Z		Bolt (M12 x 75)		1
12	02/101370		Dowel		2
13	02/201638		Flywheel assembly *6 Hole fixing assembly*		1
13.1	333/F7081		Flywheel assembly *12 Hole fixing assembly*		1
14	:02/100078		Gear starter ring		1
15	1305/3410		Bolt *For item 13*		6
15.1	1305/3410		Bolt *For item 13.1*		12
16	02/200725		Washer *For item 15*		6
16.1	02/200725		Washer *For item 15.1*		12
17	1315/0408Z		Setscrew M10 x 30 *Flywheel Housing to Gearbox, Not illustrated*		11
18	1425/0008Z		Spring Washer *Used with item 17*		11

9802/2635 P1-8-1 ENGINE MOUNTINGS

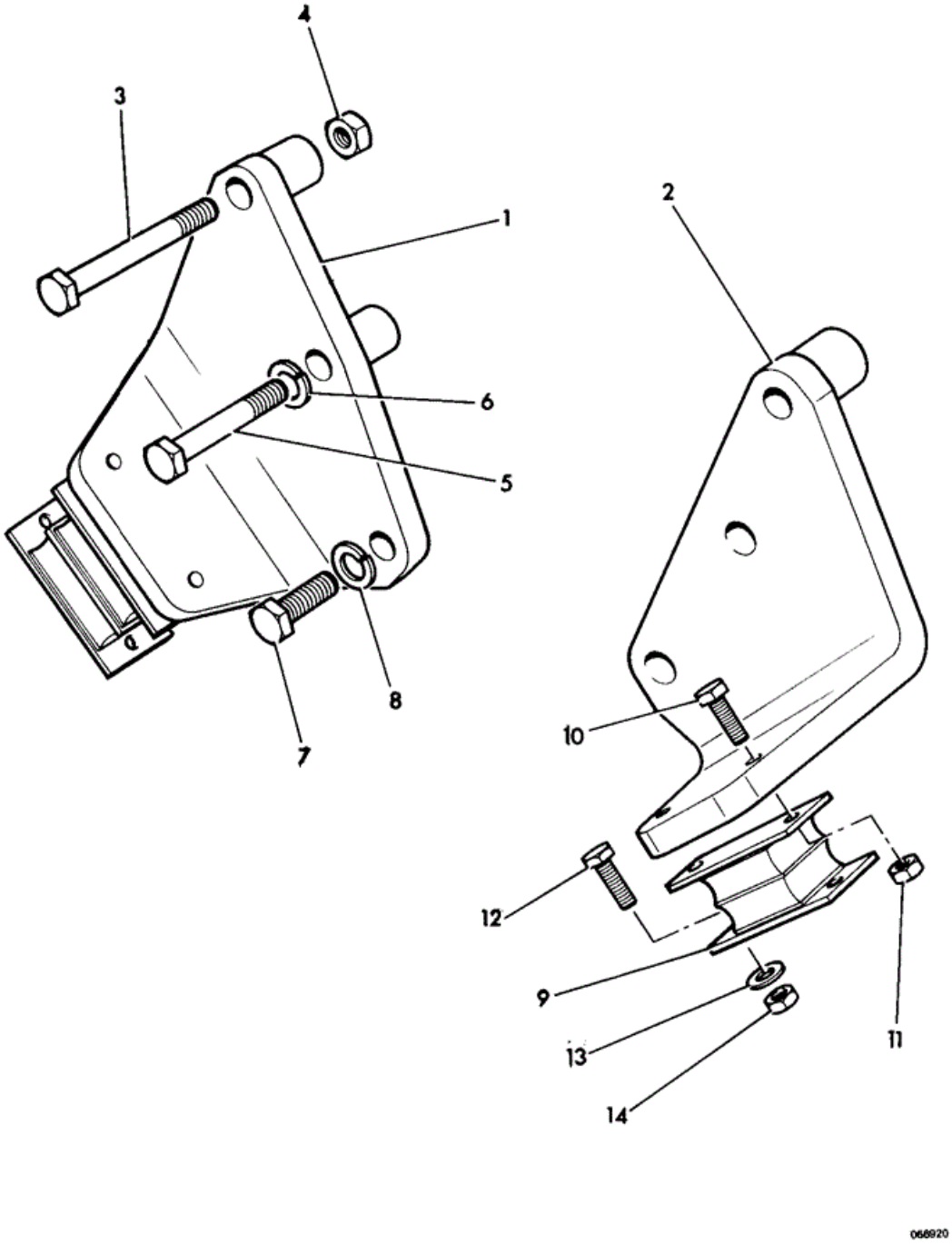

Item	Part #	Change No	Description	Usage Code	QTY
1	259/22300		Bracket mounting, left hand		1
2	259/22200		Bracket mounting, right hand		1
3	1315/3721Z		Bolt M16 x 110		2
4	1370/0603Z		Nut lock M16		2
5	1315/3717Z		Bolt M16 x 75mm		2
6	823/00603		Washer hardened M16		2
7	1315/0710Z		Setscrew		2
8	823/00603		Washer hardened M16		2
9	331/21988		Mounting resiliant		2
10	1315/0410Z		Setscrew Screw		4
11	1370/0303Z		Nut lock M10		4
12	1315/0409Z		Setscrew M10 x 35		4
13	1420/0008Z		Washer (M10)		4
14	1370/0303Z		Nut lock M10		4

9802/2635 P2-1-1 CYLINDER HEAD RJ BUILD

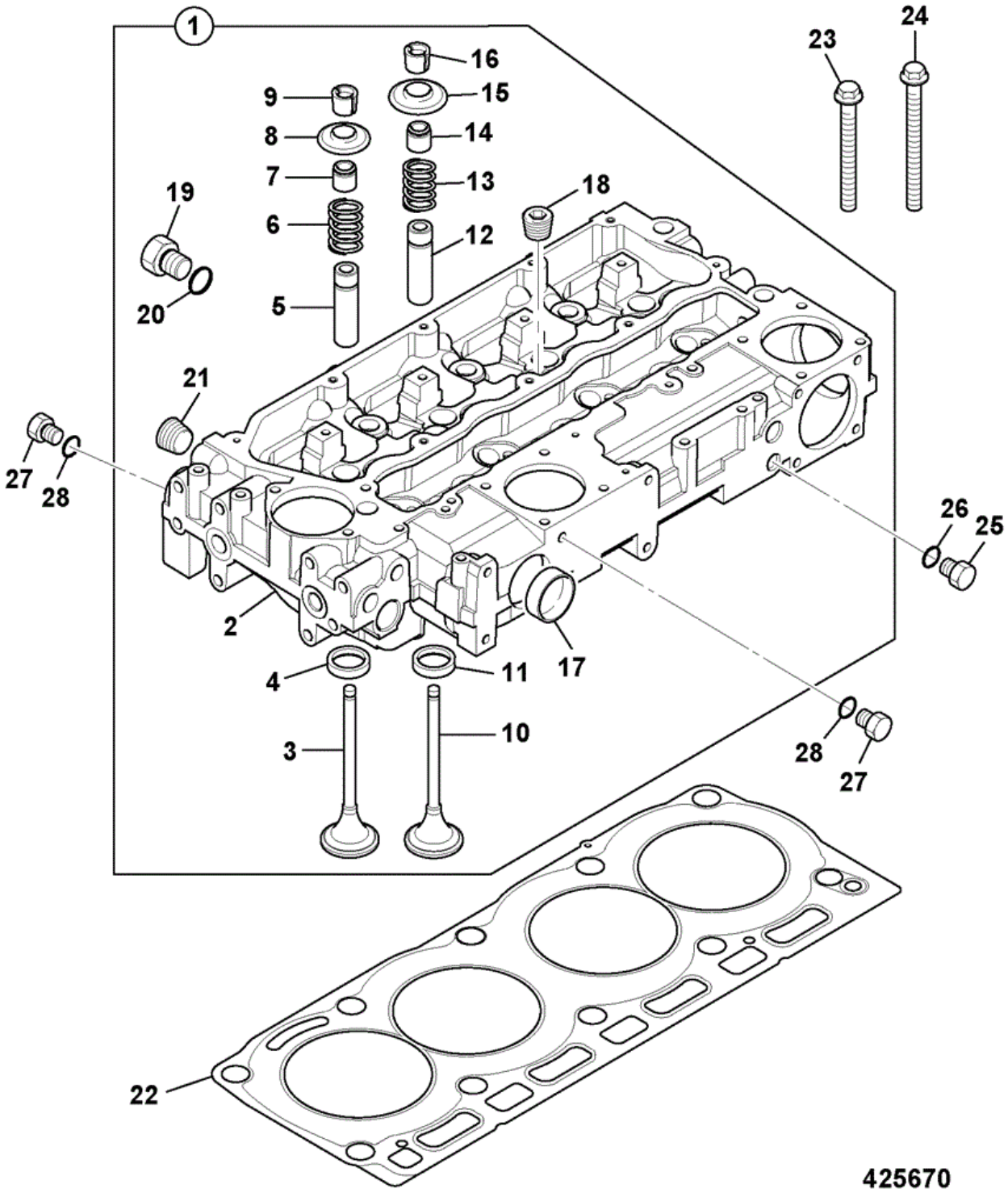

Item	Part #	Change No	Description	Usage Code	QTY
1	02/202940		Head cylinder assembly		1
2	****		None serviced part		1
3	:02/202941		Valve inlet		4

4	:02/202938		Insert inlet valve		4
5	:02/201812		Guide valve		4
6	:02/202934		Spring valve		4
7	:02/202936		Seal valve stem brown		4
8	:02/202937		Cap valve		4
9	:02/201515		Collet		4
10	:02/202942		Valve exhaust		4
11	:02/202939		Insert exhaust valve		4
12	:02/201812		Guide valve		4
13	:02/202934		Spring valve		4
14	:02/202936		Seal valve stem brown		4
15	:02/202937		Cap valve		4
16	:02/201515		Collet		4
17	:02/100107		Plug core D=50mm		2
18	:02/100134		Plug		4
19	:02/202943		Plug		1
20	:02/202944		O Ring		1
21	:02/100095		Plug taper		1
22	02/203147		Gasket cylinder head		1
23	02/202946		Bolt cylinder head		7
24	02/202947		Bolt cylinder head		3
25	02/202959		Plug		1
26	02/202960		O Ring		1
27	02/202943		Plug		2
28	02/202944		O Ring		2

9802/2635 P2-2-1 ROCKER ASSEMBLY PUSH RODS & TAPPETS RJ BUILDS

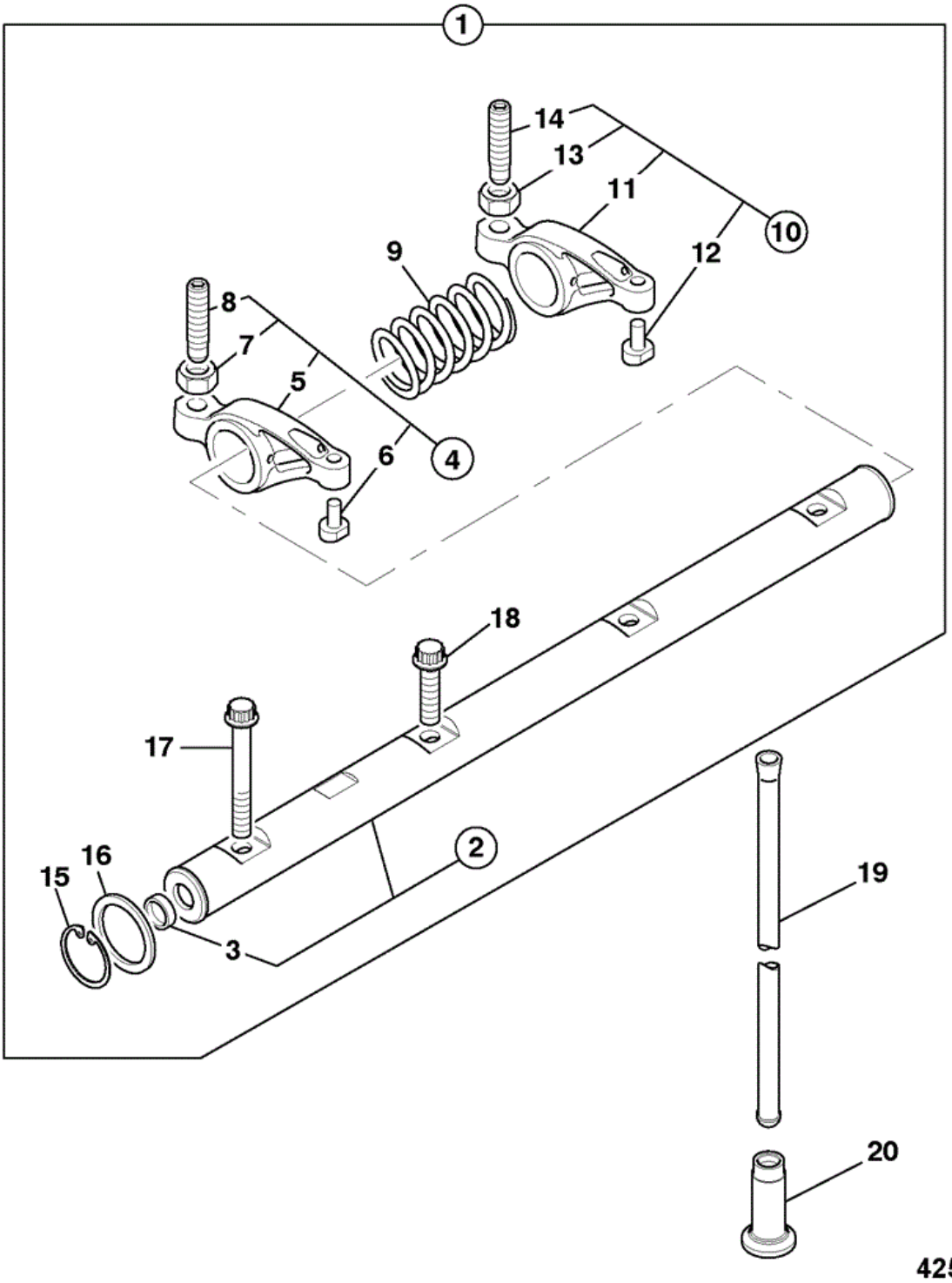

Item	Part #	Change No	Description	Usage Code	QTY
1	02/202950		Shaft rocker assembly		1

BUY NOW

PayPal VISA MasterCard DISCOVER AMERICAN EXPRESS

Download the full PDF manual instantly.

Our customer service e-mail:

aservicemanualpdf@yahoo.com