# SERVICE MANUAL

## T8.320 / T8.350 / T8.380 / T8.410 / T8.380 SmartTrax™ / T8.410 SmartTrax™ Powershift Transmission (PST)

Tractor

*PIN ZERE08100 and above*

**Part number 47748118**
1st edition English
November 2014

NEW HOLLAND AGRICULTURE

# Link Product / Engine

| Product | Market Product | Engine |
|---|---|---|
| T8.320 696110027 PST TIER 4B [ZERE08100 - ] | North America | F2CFE613G*B001 |
| T8.350 696110037 PST TIER 4B [ZERE08100 - ] | North America | F2CFE614G*B002 |
| T8.380 696110047 PST TIER 4B [ZERE08100 - ] | North America | F2CFE614D*B002 |
| T8.410 696110057 PST TIER 4B [ZERE08100 - ] | North America | F2CFE614C*B002 |
| T8.380 SmartTrax™ 696110077 PST TIER 4B [ZERE08100 - ] | North America | F2CFE614D*B002 |
| T8.410 SmartTrax™ 696110087 PST TIER 4B [ZERE08100 - ] | North America | F2CFE614C*B002 |

# Contents


INTRODUCTION

Engine ..... 10

[10.001] Engine and crankcase ..... 10.1

[10.101] Cylinder heads ..... 10.2

[10.202] Air cleaners and lines ..... 10.3

[10.216] Fuel tanks ..... 10.4

[10.218] Fuel injection system ..... 10.5

[10.304] Engine lubrication system ..... 10.6

[10.310] Aftercooler ..... 10.7

[10.400] Engine cooling system ..... 10.8

[10.414] Fan and drive ..... 10.9

[10.500] Selective Catalytic Reduction (SCR) exhaust treatment ..... 10.10

Power coupling ..... 19

[19.100] Drive shaft ..... 19.1

[19.110] Flywheel damper ..... 19.2

[19.120] Drive shaft shield assembly ..... 19.3

Transmission ..... 21

[21.105] Powershift transmission lubrication system ..... 21.1

[21.113] Powershift transmission ..... 21.2

[21.135] Powershift transmission external controls ..... 21.3

[21.155] Powershift transmission internal components ..... 21.4

[21.200] Dropbox ..... 21.5

[21.900] Hydraulic pump drive ..... 21.6

Four-Wheel Drive (4WD) system ..... 23

[23.202] Electro-hydraulic control ..... 23.1

[23.314] Drive shaft ..... 23.2

Front axle system ..... 25
[25.100] Powered front axle ..... 25.1
[25.102] Front bevel gear set and differential ..... 25.2
[25.108] Final drive hub, steering knuckles, and shafts ..... 25.3
[25.122] Axle suspension control ..... 25.4
Rear axle system ..... 27
[27.100] Powered rear axle ..... 27.1
[27.106] Rear bevel gear set and differential ..... 27.2
[27.610] Rear axle track yoke assembly ..... 27.3
Power Take-Off (PTO) ..... 31
[31.104] Rear electro-hydraulic control ..... 31.1
[31.110] One-speed rear Power Take-Off (PTO) ..... 31.2
[31.114] Two-speed rear Power Take-Off (PTO) ..... 31.3
[31.146] Front Power Take-Off (PTO) ..... 31.4
Brakes and controls ..... 33
[33.110] Parking brake or parking lock ..... 33.1
[33.202] Hydraulic service brakes ..... 33.2
[33.220] Trailer brake hydraulic control ..... 33.3
[33.224] Trailer brake pneumatic control ..... 33.4
[33.240] Emergency brake ..... 33.5
Hydraulic systems ..... 35
[35.000] Hydraulic systems ..... 35.1
[35.102] Pump control valves ..... 35.2
[35.106] Variable displacement pump ..... 35.3
[35.114] Three-point hitch control valve ..... 35.4
[35.124] Three-point hitch hydraulic adjustment ..... 35.5
[35.204] Remote control valves ..... 35.6
[35.300] Reservoir, cooler, and filters ..... 35.7

[35.304] Combination pump units ..... 35.8
Hitches, drawbars, and implement couplings ..... 37
[37.110] Rear three-point hitch ..... 37.1
[37.162] Front hitch ..... 37.2
Steering ..... 41
[41.101] Steering control ..... 41.1
[41.200] Hydraulic control components ..... 41.2
[41.206] Pump ..... 41.3
[41.432] Autoguidance steering ..... 41.4
[41.910] Auxiliary steering ..... 41.5
Wheels ..... 44
[44.520] Rear wheels ..... 44.1
Tracks and track suspension ..... 48
[48.100] Tracks ..... 48.1
[48.130] Track frame and driving wheels ..... 48.2
[48.134] Track tension units ..... 48.3
[48.138] Track rollers ..... 48.4
Cab climate control ..... 50
[50.100] Heating ..... 50.1
[50.200] Air conditioning ..... 50.2
[50.300] Cab pressurizing system ..... 50.3
Electrical systems ..... 55
[55.010] Fuel injection system ..... 55.1
[55.012] Engine cooling system ..... 55.2
[55.014] Engine intake and exhaust system ..... 55.3
[55.024] Transmission control system ..... 55.4
[55.045] Front axle control system ..... 55.5

[55.046] Rear axle control system ..... 55.6
[55.050] Heating, Ventilation, and Air-Conditioning (HVAC) control system ..... 55.7
[55.051] Cab Heating, Ventilation, and Air-Conditioning (HVAC) controls ..... 55.8
[55.100] Harnesses and connectors ..... 55.9
[55.130] Rear three-point hitch electronic control system ..... 55.10
[55.201] Engine starting system ..... 55.11
[55.301] Alternator ..... 55.12
[55.302] Battery ..... 55.13
[55.510] Cab or platform harnesses and connectors ..... 55.14
[55.512] Cab controls ..... 55.15
[55.513] Cab transmission controls ..... 55.16
[55.518] Wiper and washer system ..... 55.17
[55.640] Electronic modules ..... 55.18
[55.988] Selective Catalytic Reduction (SCR) electrical system ..... 55.19
[55.DTC] FAULT CODES ..... 55.20
Platform, cab, bodywork, and decals ..... 90
[90.100] Engine hood and panels ..... 90.1
[90.102] Engine shields, hood latches, and trims ..... 90.2
[90.124] Pneumatically-adjusted operator seat ..... 90.3
[90.150] Cab ..... 90.4
[90.151] Cab interior ..... 90.5
[90.160] Cab interior trim and panels ..... 90.6

# INTRODUCTION

# Safety rules

## Personal safety

This is the safety alert symbol. It is used to alert you to potential personal injury hazards. Obey all safety messages that follow this symbol to avoid possible death or injury.

Throughout this manual you will find the signal words DANGER, WARNING, and CAUTION followed by special instructions. These precautions are intended for the personal safety of you and those working with you.

Read and understand all the safety messages in this manual before you operate or service the machine.

⚠ DANGER indicates a hazardous situation that, if not avoided, will result in death or serious injury.

⚠ WARNING indicates a hazardous situation that, if not avoided, could result in death or serious injury.

⚠ CAUTION indicates a hazardous situation that, if not avoided, could result in minor or moderate injury.

**FAILURE TO FOLLOW DANGER, WARNING, AND CAUTION MESSAGES COULD RESULT IN DEATH OR SERIOUS INJURY.**

### Machine safety

***NOTICE:*** *Notice indicates a situation that, if not avoided, could result in machine or property damage.*

Throughout this manual you will find the signal word Notice followed by special instructions to prevent machine or property damage. The word Notice is used to address practices not related to personal safety.

### Information

***NOTE:*** *Note indicates additional information that clarifies steps, procedures, or other information in this manual.*

Throughout this manual you will find the word Note followed by additional information about a step, procedure, or other information in the manual. The word Note is not intended to address personal safety or property damage.

# Safety rules - General maintenance safety

## ⚠ General maintenance safety⚠

Keep the area used for servicing the machine clean and dry. Clean up spilled fluids.

Service the machine on a firm, level surface.

Install guards and shields after you service the machine.

Close all access doors and install all panels after servicing the machine.

Do not attempt to clean, lubricate, clear obstructions, or make adjustments to the machine while it is in motion or while the engine is running.

Always make sure that working area is clear of tools, parts, other persons and pets before you start operating the machine.

Unsupported hydraulic cylinders can lose pressure and drop the equipment, causing a crushing hazard. Do not leave equipment in a raised position while parked or during service, unless the equipment is securely supported.

Jack or lift the machine only at jack or lift points indicated in this manual.

Incorrect towing procedures can cause accidents. When you tow a disabled machine follow the procedure in this manual. Use only rigid tow bars.

Stop the engine, remove the key, and relieve pressure before you connect or disconnect fluid lines.

Stop the engine and remove the key before you connect or disconnect electrical connections.

Scalding can result from incorrect removal of coolant caps. Cooling systems operate under pressure. Hot coolant can spray out if you remove a cap while the system is hot. Allow the system to cool before you remove the cap. When you remove the cap, turn it slowly to allow pressure to escape before you completely remove the cap.

Replace damaged or worn tubes, hoses, electrical wiring, etc.

The engine, transmission, exhaust components, and hydraulic lines may become hot during operation. Take care when you service such components. Allow surfaces to cool before you handle or disconnect hot components. Wear protective equipment when appropriate.

When welding, follow the instructions in the manual. Always disconnect the battery before you weld on the machine. Always wash your hands after you handle battery components.

# SERVICE MANUAL

## Engine

**T8.320 696110027 PST TIER 4B [ZERE08100 - ] , T8.350 696110037 PST TIER 4B [ZERE08100 - ] , T8.380 696110047 PST TIER 4B [ZERE08100 - ] , T8.380 SmartTrax™ 696110077 PST TIER 4B [ZERE08100 - ] , T8.410 696110057 PST TIER 4B [ZERE08100 - ] , T8.410 SmartTrax™ 696110087 PST TIER 4B [ZERE08100 - ]**

# Engine - Remove

**Prior operation:**
Disconnect the batteries — **Battery - Disconnect (55.302)**
**Prior operation:**
Remove the hood — **Hood - Remove (90.100)**
**Prior operation:**
**Side shield - Remove (90.102)**
**Prior operation:**
Recover the refrigerant — **Air conditioning - Recover (50.200)**
**Prior operation:**
Drain the coolant — **Engine cooling system - Emptying (10.400)**
**Prior operation:**
**Engine cooling system - Remove (10.400)**
**Prior operation:**
**Diesel Oxidation Catalyst (DOC) - Remove (10.500)**

***NOTE:*** *Clean all fittings before disconnecting.*

***NOTE:*** *Cap or plug all lines and ports when disconnecting hydraulic components.*

1. Disconnect the harness connector to the humidity sensor **(1)** and the air restriction sensor **(2)**. Disengage the hose clamp **(3)** and disconnect the hose from the air intake tube.

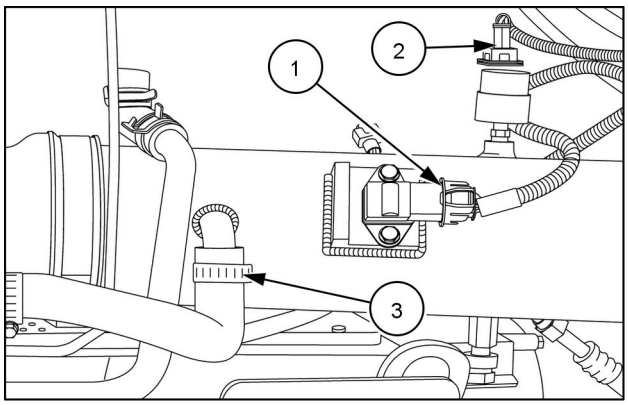


RAIL13TR04202AA 1

2. Disconnect the clamps **(1)** from each end of the air intake tube and remove the tube.

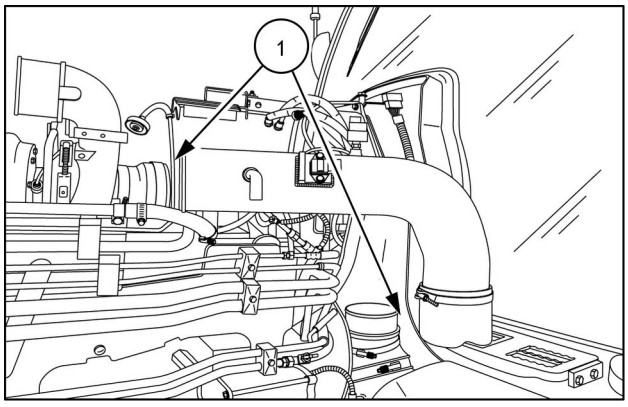


RAIL13TR04211AA 2

3. Cut the wire tie **(1)** securing the harness to the hood support **(2)**.

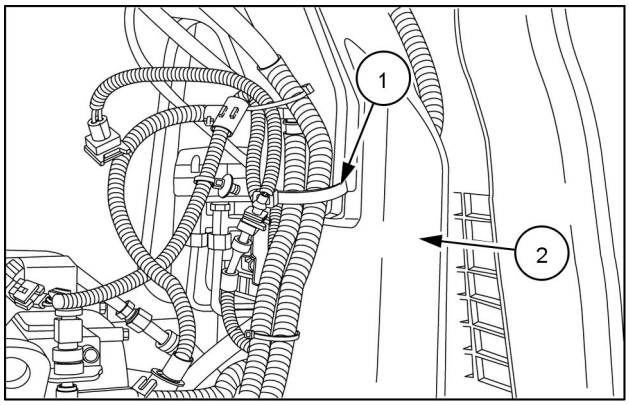


RAIL13TR04204AA 3

4. Disconnect the starter cables **(1)** and the auxiliary wire **(2)**.

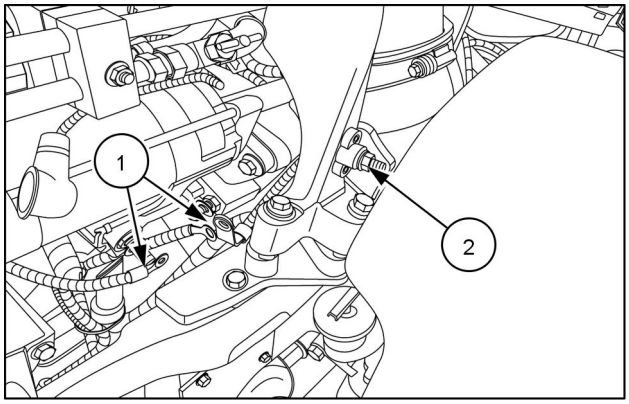


RAIL13TR04209AA 4

5. Remove the three bolts **(1)** securing the hood support to the frame.

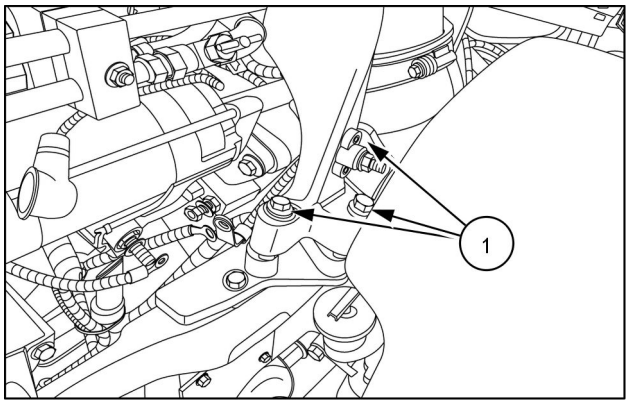


RAIL13TR04209AA 5

6. Remove the hood support.

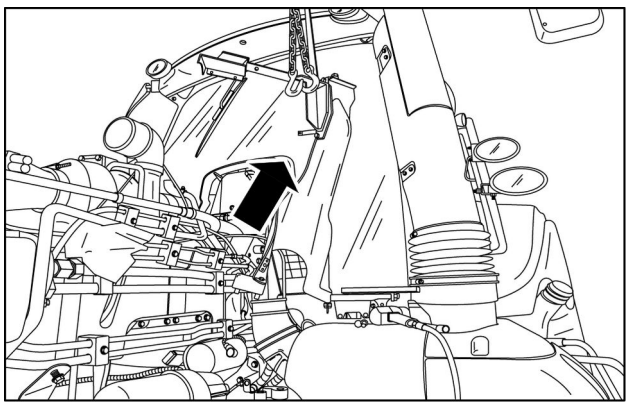

RAIL13TR04212AA 6

**Download the full PDF manual instantly.**

**Our customer service e-mail:**

**aservicemanualpdf@yahoo.com**