Fig. 011 CYLINDER BLOCK

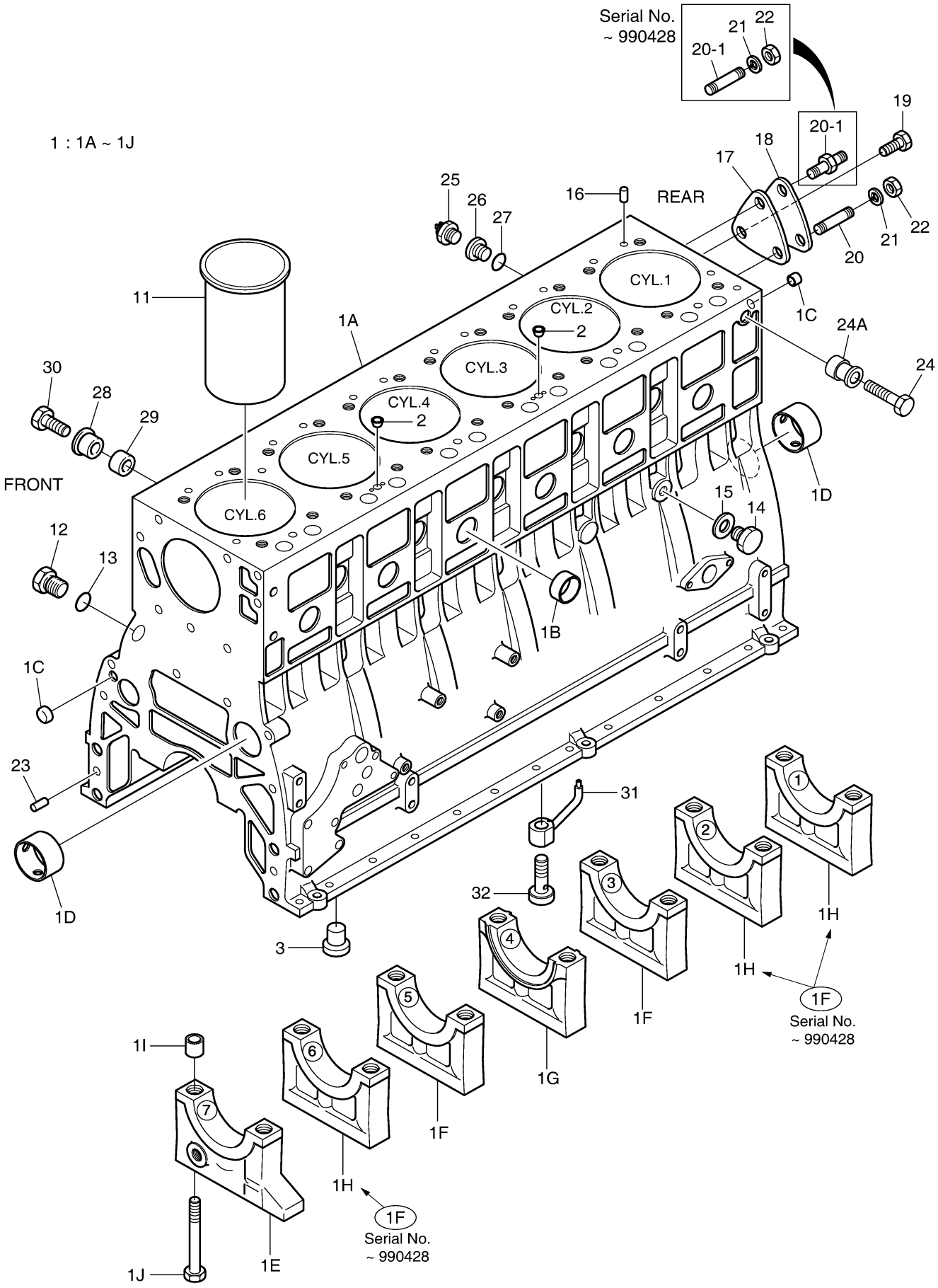

Fig. 011 CYLINDER BLOCK

Key No	Part No	Description	Qty	S.C	Serial No	ICA	Replacable	Qty
1	65.01101-6040C	CYLINDER BLOCK ASS'Y	1		~990428	Y	65.01101-6040E	1
1	65.01101-6040E	CYLINDER BLOCK ASS'Y	1		~010802	Y	65.01101-6040F	1
1	65.01101-6040F	CYLINDER BLOCK ASS'Y	1		~030730	Y	65.01101-6040G	1
1	65.01101-6040G	CYLINDER BLOCK ASS'Y	1		~040209	Y	65.01101-6040H	1
1	65.01101-6040H	CYLINDER BLOCK ASS'Y	1		~040726	Y	65.01101-6040I	1
1	65.01101-6040I	CYLINDER BLOCK ASS'Y(T/C)	1		~050907	Y	65.01101-6040J	1
1	65.01101-6040J	CYLINDER BLOCK ASS'Y(T/C)	1		~080529	Y	65.01101-6040N	1
1	65.01101-6040N	CYLINDER BLOCK ASS'Y	1		080530~			
1A	65.01101-0040L	BLOCK;CYLINDER	1	D	~010802			
1A	65.01101-0040M	BLOCK;CYLINDER	1	D	~040726			
1A	65.01101-0040N	BLOCK;CYLINDER(T/C)	1	D	~050907			
1A	65.01101-0040O	BLOCK;CYLINDER(T/C)	1	D	~080529			
1A	65.01101-0040R	BLOCK;CYLINDER	1	D	080530~			
1B	06.15091-0326	PLUG;CORE	9		~040209	I	65.91606-0037	9
1B	65.91606-0037	PLUG;CORE	9		040210~			
1C	65.91606-0041	PLUG;CORE	2					
1D	65.04410-0017	BUSH;CAM SHAFT	4	D				
1E	65.01105-1164D	CAP;BEARING NO.7	1	D	~030730			
1E	65.01105-1164E	BEARING;CAP NO7	1	D	~050907			
1E	65.01105-1175C	BEARING;CAP NO7	1	D	050908~			
1F	65.01105-1160	CAP;BEARING NO.1.2.3.5.6	5	D	~990428			
1F	65.01105-1160E	CAP;BEARING NO.3.5	2	D	~030730			
1F	65.01105-1160F	BEARING;CAP NO.3.5	2	D	030731~			
1G	65.01105-1156C	CAP;BEARING THRUST	1	D	~030730			
1G	65.01105-1156D	CAP BEARING;THRUST	1	D	030731~			
1H	65.01105-1172A	CAP;BEARING NO.1.2.6	3	D	~030730			
1H	65.01105-1172B	BEARING;CAP NO.1.2.6	3	D	030731~			
1I	65.91710-0035	RING;LOCATING	14	D	~030428	Y	65.91710-0035B	14
1I	65.91710-0035B	RING;LOCATING	14	D	030429~			
1J	65.90020-0035	BOLT;BEARING 12.9T	14	D	~030428	Y	65.90020-0035B	14
1J	65.90020-0035B	BOLT;BEARING CAP	14	D	030429~			
2	65.91001-0002	PLUG	2		~050908	I	65.91020-0013	2
2	65.91001-0013	AVSEAL	2		~060223	Y	65.91001-0013A	2
2	65.91001-0013A	PIN;CORE	2		060224~			
3	65.91020-0013	PLUG;CORE	1					
11	65.01201-0050	LINER;CYLINDER	6					

Key No	Part No	Description	Qty	S.C	Serial No	ICA	Replacable	Qty
12	65.90310-0048	SCREW;PLUG M10X1.5	6					
13	06.56180-0714	RING;SEAL	6					
14	65.90310-0091	SCREW;PLUG M12X1.5X20	1					
15	06.56190-0704	RING;SEAL	1					
16	06.22022-0907	PIN;DOWEL 6M6X10	6		~050224			
16	06.22022-0911	PIN;DOWEL	6		050225~			
17	65.96601A0042	GASKET;END COVER	1					
18	65.91605-0006B	COVER;END	1					
19	06.01913-3114	BOLT ASS'Y M8X22	1					
20	06.06225-0706	BOLT;STUD M8X25	1		~990428			
20	06.06225-0704	BOLT;STUD M8X20	1		990429~			
20-1	06.06225-0708	BOLT;STUD M8X30	1		~990428			
20-1	65.90201-0075	BOLT;SPACER	1		990429~			
21	06.16731-2107	WASHER	2					
22	06.11063-8214	NUT	2		~990428			
22	06.11063-8214	NUT	1		990429~			
23	06.22220-1212	PIN;SPIRAL LOCK 8X24	2		~980828	Y	06.22022-1013	2
23	06.22022-1013	PIN;DOWEL	2		980829~			
24	06.01013-9517	BOLT;HEX M16X60	1					
24A	65.91701-0148	SPACER	1					
25	65.27441-7007	SWITCH;OIL PRESSURE	1					
26	65.98130-0194	ADAPTER	1					
27	06.56180-0714	RING;SEAL	1					
28	65.91701-0273	RING;SPACER	1					
29	65.91701-0088	SPACER	1					
30	06.01283-7524	BOLT;HEX. M16X65	1					
31	65.01601-6003	OIL SPRAY NOZZLE ASS'Y	6					
32	65.05405-6001	RELIEF VALVE ASS`Y	6					

Fig. 012 TIMING GEAR CASE

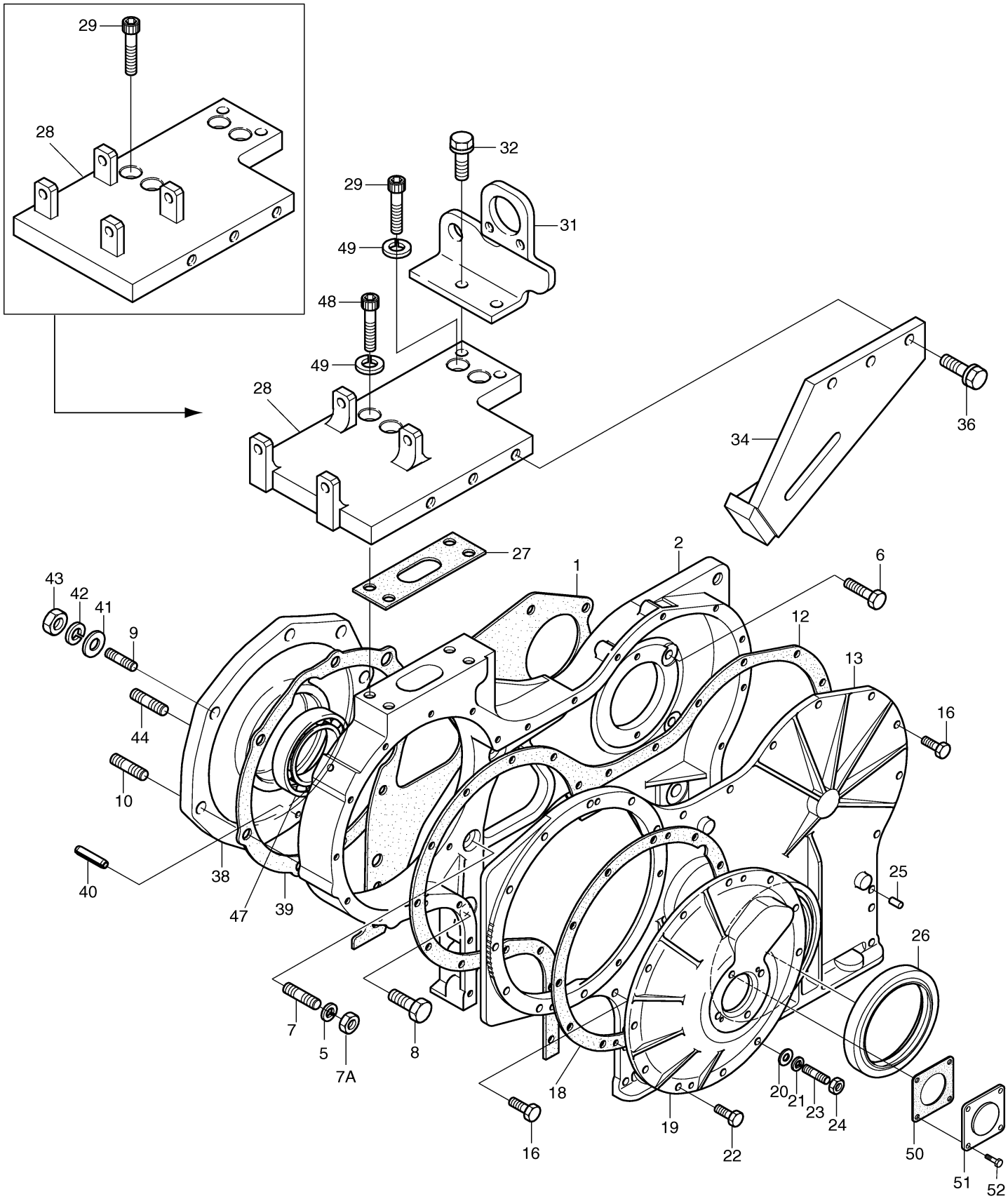

Fig. 012 TIMING GEAR CASE

Key No	Part No	Description	Qty	S.C	Serial No	ICA	Replacable	Qty
1	65.01903C0021	GASKET;TIMING GEAR CASE	1					
2	65.01304-0010M	CASE;TIMING GEAR	1		~000730	Y	65.01304-0010N	1
2	65.01304-0010N	CASE;TIMING GEAR	1		000731~			
5	06.16731-2107	WASHER	1					
6	06.01913-3113	BOLT ASS'Y M8X20	5					
7	06.06225-0704	BOLT;STUD M8X20	1					
7A	06.11063-8214	NUT	1					
8	06.01943-3317	BOLT ASS`Y M12X1.5X30	4					
9	65.90201-0048	BOLT;STUD	1					
10	06.06225-0809	BOLT;STUD M10X35	4					
10	06.06225-0810	BOLT;STUD M10X40	2					
10	06.06225-0809	BOLT;STUD M10X35	6					
12	65.01903B0113	GASKET;T.G.C COVER	1					
13	65.01305-5028A	TIMING GEAR CASE COVER	1		~001215	Y	65.01305-5028C	1
13	65.01305-5028C	COVER;TIMING GEAR CASE	1		001216~			
16	06.01923-2914	BOLT ASS`Y M6X22	13					
18	65.01903B0029	GASKET;COVER	1					
19	65.01307-5009	TIMING GEAR CASE COVER	1		~051005	I	65.01307-5002	1
19	65.01307-5002	COVER;TIMING GEAR CASE	1		051006~			
20	06.15010-2309	WASHER;PLAIN	2					
21	06.16731-2105	WASHER	2					
22	06.01923-2918	BOLT ASS`Y M6X35	9					
23	06.06225-0502	BOLT;STUD M6X16	2					
24	06.11063-8212	NUT	2					
25	06.22022-0907	PIN;DOWEL 6M6X10	2					
26	65.01510-0026	SEAL;CRANK SHAFT(FRONT)	1		~990916	Y	65.01510-0157	1
26	65.01510-0157	SEAL;OIL	1		990917~			
27	65.54903A0013	GASKET	1					
28	65.54302-5017	BRACKET;AIRCON	1		~990430	Y	65.54302-0006	1
28	65.54302-0006	BRACKET;AIRCON	1		990501~	Y	65.54302-0006A	1
28	65.54302-0006A	BRACKET;AIRCON	1		000222~			
29	06.02090-0511	BOLT;SOCKET M10X22	4		~990430			
29	06.02090-0511	BOLT;SOCKET M10X22	2		990501~			
31	65.54306-0003	ANGLE;BRACKET	1					
32	06.01913-3215	BOLT ASS'Y M10X25	2					
34	65.95840-0033	BRACKET;IDLE PULLEY	1					

Key No	Part No	Description	Qty	S.C	Serial No	ICA	Replacable	Qty
36	06.01913-3213	BOLT ASS`Y M10X20	3					
38	65.11401-0040	MOUNTING FLANGE ASS'Y	1					
39	65.11902-0018A	GASKET;MOUNTING FLANGE	1					
40	06.22220-1110	PIN;SPRING	1					
41	06.15010-2312	WASHER;PLAIN	7					
42	06.16731-2108	WASHER;SPRING	7					
43	06.11063-8215	NUT;HEX. M10	7					
44	65.90201-0059	BOLT;STUD M10X35	4					
47	65.93410-0036	BEARING;BALL	1					
48	06.02090-0513	BOLT;SOCKET	2		990501~			
49	06.16731-2108	WASHER;SPRING	4					
50	65.27901-0005B	GASKET	1		~051005			
51	65.91605-0009	COVER;END	1		~051005			
52	06.01913-2911	BOLT ASS'Y M6X16	4		~051005			

Fig. 013 FLYWHEEL HOUSING

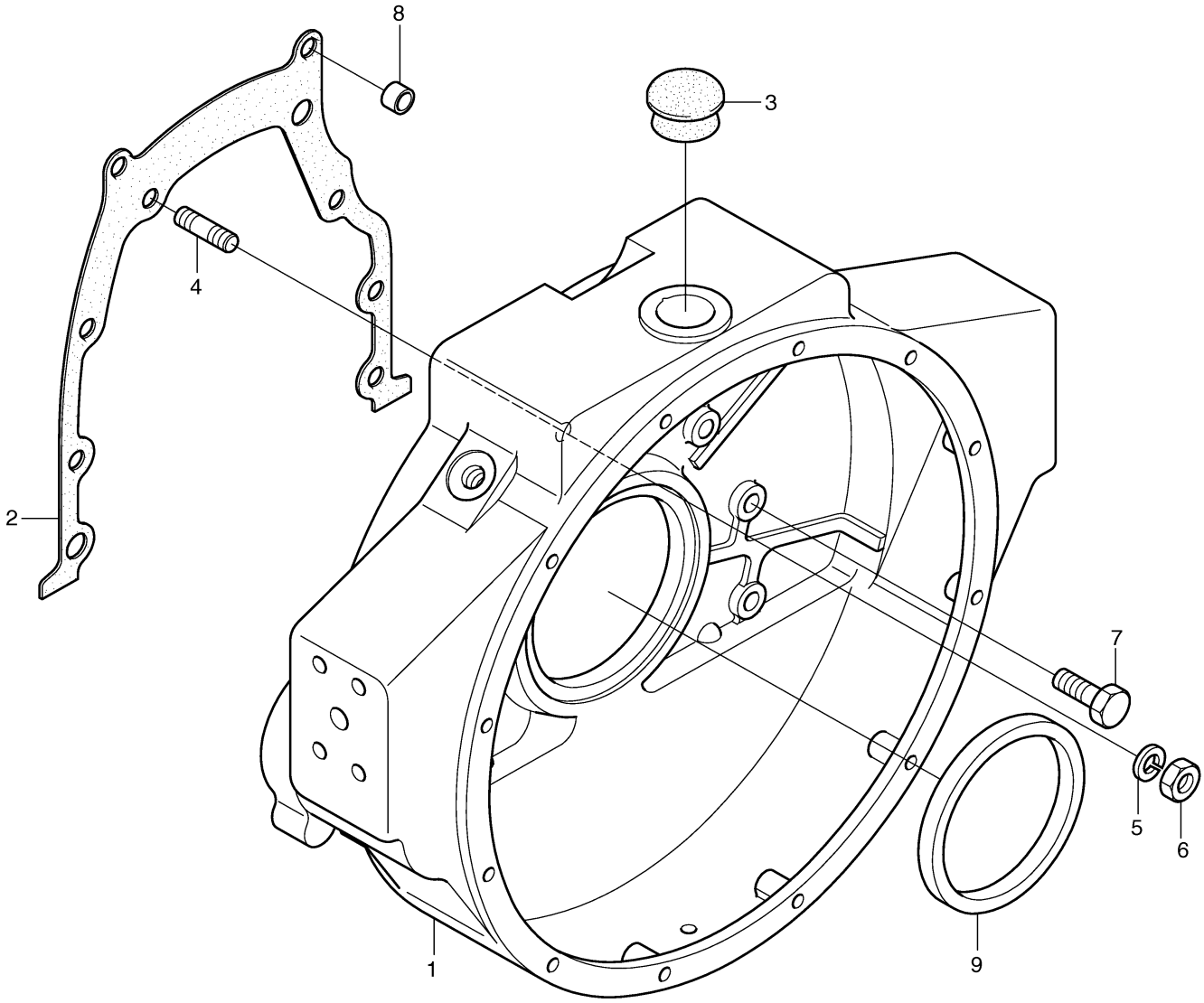

Fig. 013 FLYWHEEL HOUSING

Key No	Part No	Description	Qty	S.C	Serial No	ICA	Replacable	Qty
1	65.01401-0177	HOUSING;FLYWHEEL	1		~031024	Y	65.01401-0177B	1
1	65.01401-0177B	HOUSING;FLYWHEEL	1		~040304	Y	65.01401-0177C	1
1	65.01401-0177C	HOUSING;FLY WHEEL	1		040305~			
2	65.01903A0178	GASKET;FLYWHEEL HOUSING	1					
3	65.96002-0003	PLUG;RUBBER	2					
4	06.06176-8309	BOLT,STUD	1					
5	06.16731-2109	WASHER;SPRING A12	1					
6	06.11063-9216	NUT;HEX. M12X1.5	1					
7	06.01943-3319	BOLT ASS'Y M12X1.5X40	9					
8	65.91710-0023	RING;INTERMEDIATE	2		~050128	I	65.91710-0016	1
8	65.91710-0016	RING;STOPPER	2		050129~			
9	51.01510-0141	SEAL;CRANK SHAFT(REAR)	1		~990916	Y	65.01510-0037	1
9	65.01510-0037	SEAL;OIL REAR	1		990917~			

Fig. 014 CRANK SHAFT

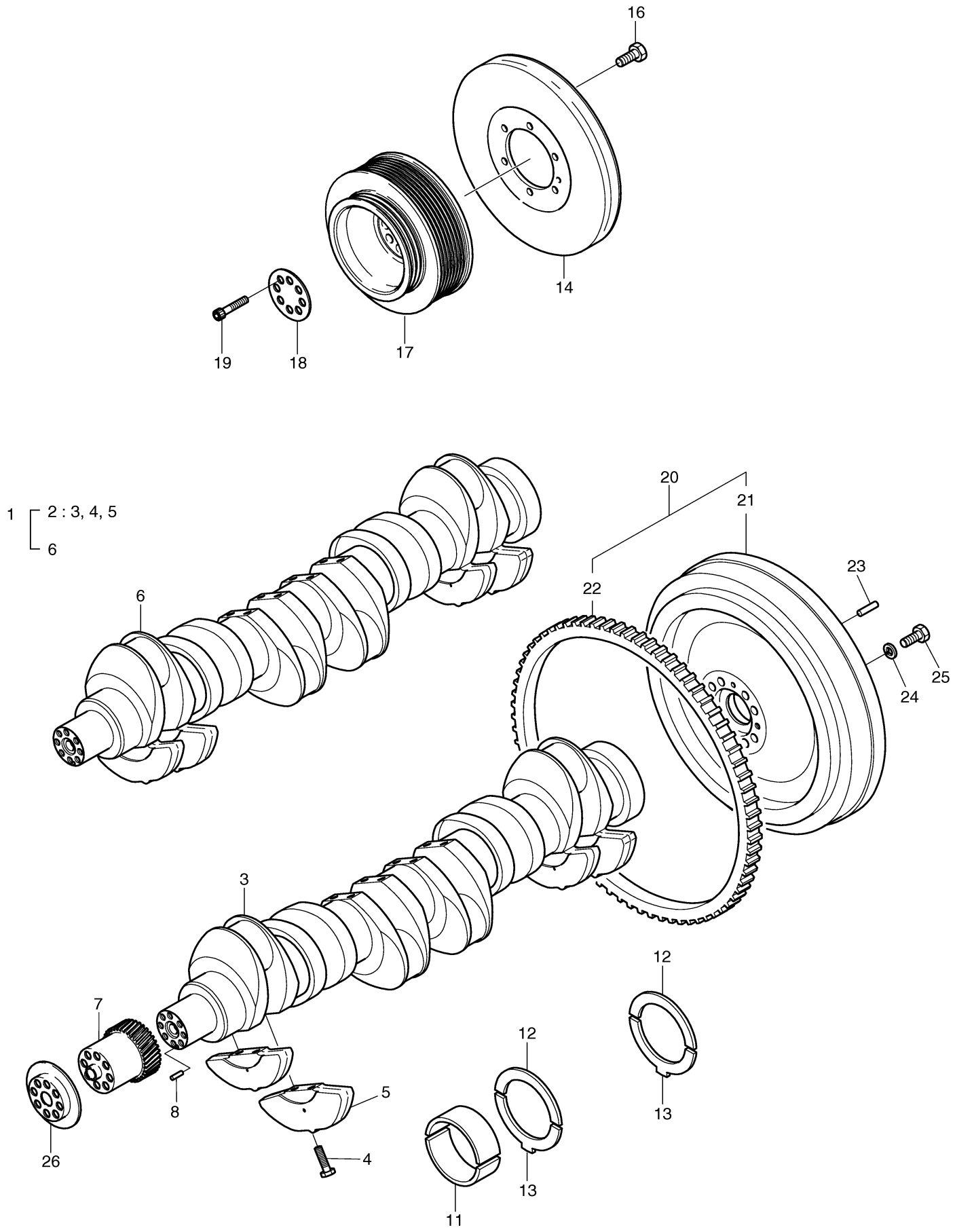

BUY NOW

PayPal VISA MasterCard DISCOVER AMERICAN EXPRESS

Download the full PDF manual instantly.

Our customer service e-mail:

aservicemanualpdf@yahoo.com