i03778971

Travel Motor - Assemble

SMCS - 4351-016

Assembly Procedure

Table 1

Required Tools			
Tool	**Part Number**	**Part Description**	**Qty**
A	3E-3879	Eyebolt	1
D	4C-8359	Eyebolt	1
F	1P-1862	Pliers	1
G	1P-0510	Driver Group	1
J	4C-4030	Thread Lock Compound	1
K	180-6533	Seal Driver	1
L	6V-7030	Micrometer Depth Gauge	1
M	8T-0447	Calipers	1
N	1U-6396	O-Ring Assembly Compound	1

NOTICE

Keep all parts clean from contaminants.

Contamination of the hydraulic system with foreign material will reduce the service life of the hydraulic system components.

To prevent contaminants from entering the hydraulic system, always plug or cap the lines, fittings, or hoses as they are disconnected. Cover any disassembled components and clean them properly before assembly.

Clean the hydraulic system properly after any major component exchange or especially after a component failure, to remove any contamination.

Note: If a failure occurs, an accurate diagnosis of the cause can prevent a recurrence. Information is available to analyze failures for piston pumps and motors. Refer to Special Publication, SEBD0641, "Analyzing Axial Piston Pump and Motor Failures".

Note: Inspect all parts. If any parts are worn or damaged use new parts for replacement. The installation of used parts during reconditioning is acceptable. Reuse and salvage information is available on piston pumps. Refer to Guideline For Reusable Parts and Salvage Operations, SEBF8032, "Piston Pumps and Motors". During reconditioning, correct any conditions that might have caused the original failure.

Note: O-ring seals , gaskets, and seals should always be replaced. A used O-ring seal may not have the same sealing properties as a new O-ring seal. Use Tooling (H) during the assembly procedure.

Note: Apply a light film of "10W" oil to all components before assembly.

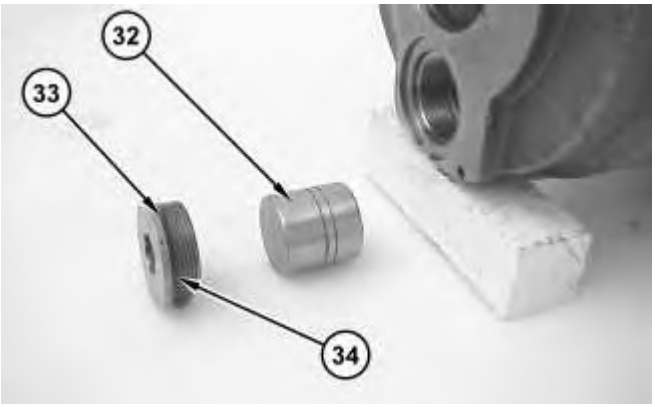

Illustration 1 g01204890

1. Install O-ring seal (34) on plug (33).
2. Install piston (32) and the plug in the travel motor body. Tighten the plug to a torque of 430 ± 40 N·m (317 ± 30 lb ft).

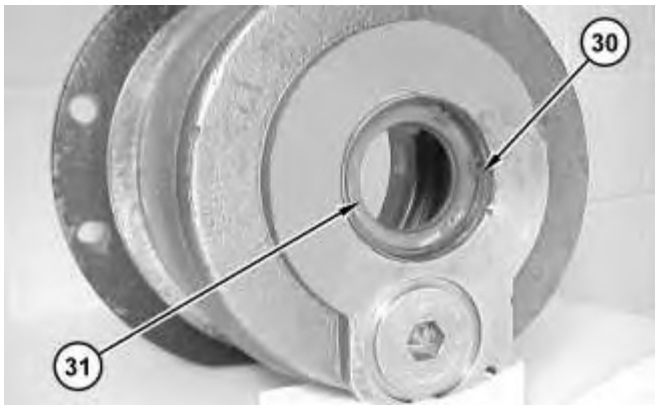

Illustration 2 g01204916

Illustration 3 g01204919

3. Apply a thin coat of Tooling (J) on the outer surfaces of lip seal (31).
4. Use Tooling (K) and a suitable hammer to drive the lip seal into the travel motor body. Drive the seal downward until Tooling (K) makes contact with the travel motor housing.
5. Use Tooling (F) to install retaining ring (30) to the shaft end of the travel motor body.

Illustration 4 g01204923

6. Install keys (29) inside the travel motor body.

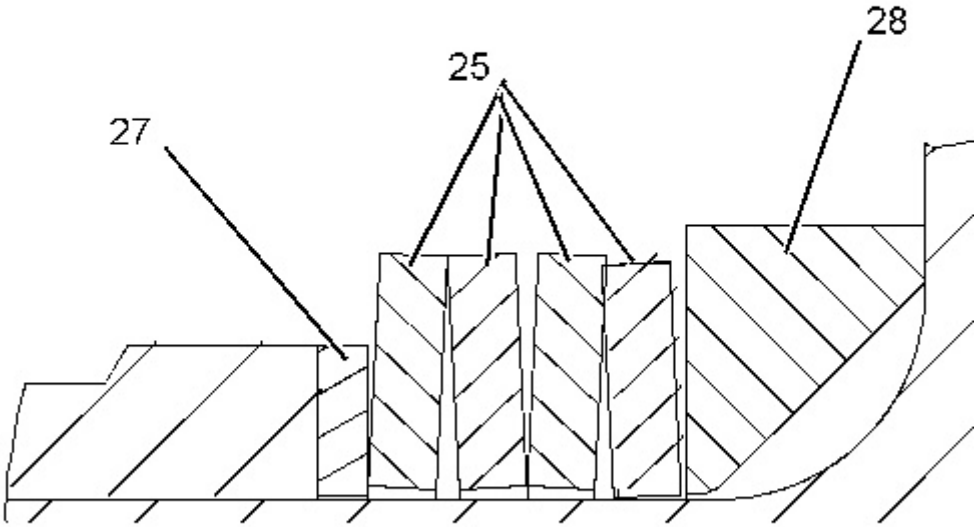

Illustration 5 g01204924

7. Assemble washers (25), inner spacer (28) and outer spacer (27) in the proper orientation, as shown.

Illustration 6 g01204931

8. Use Tooling (L) to measure the distance from the outer spacer to the surface of the table. The distance should be 22.1 ± 0.6 mm (0.87 ± 0.02 inch). If this measurement is off, check orientation of the washers. If orientation is correct, replace washers and spacers with new parts.

Illustration 7 g00625917

9. Install inner spacer (28), washers (25), and outer spacer (27) to barrel (24).
10. Install guide (26) to the barrel.

Illustration 8 g00625911

11. Install piston assemblies (23) with retainer (22) in the piston assembly's original bore in barrel (24).

Illustration 9 g00625908

12. Install cam plate (21) on the rotating group.

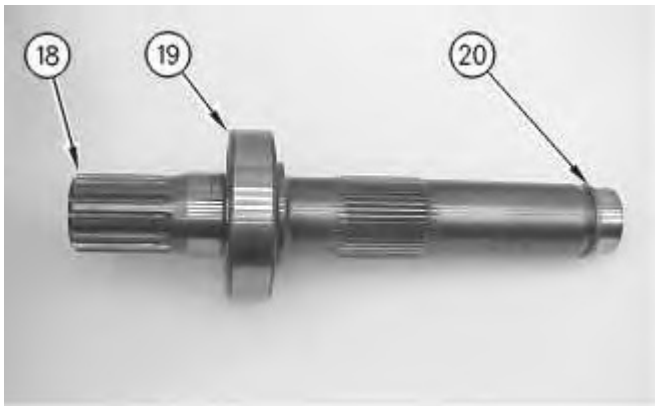

Illustration 10 g00666621

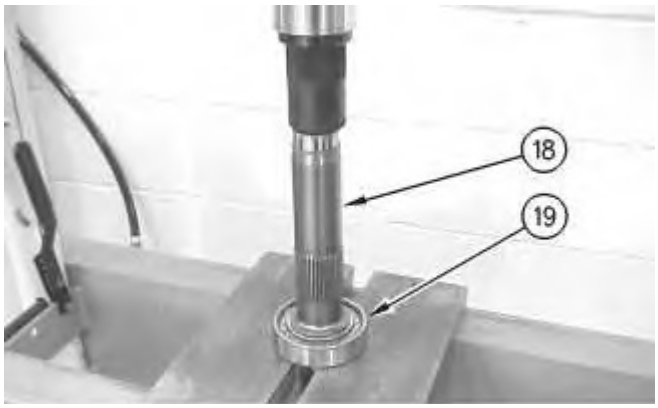

Illustration 11 g00628062

13. Use a suitable press to install bearing (19) onto shaft assembly (18).

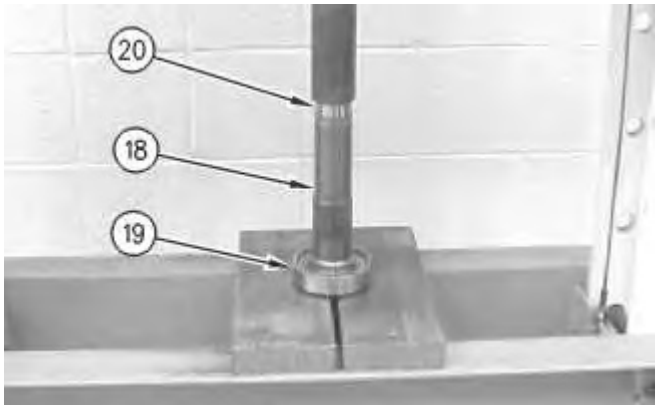

Illustration 12 g00668076

14. Use a suitable press in order to install inner race (20) onto shaft assembly (18).

Note: Place the two support plates under the lip of shaft assembly (18).

Illustration 13 g00626633

15. Insert shaft assembly (18) in the rotating group.

Illustration 14 g00625891

Illustration 15 g00666743

16. Alternate disks (17) and separator plates (16) into the travel motor housing. Start with a separator plate and end with a separator plate.

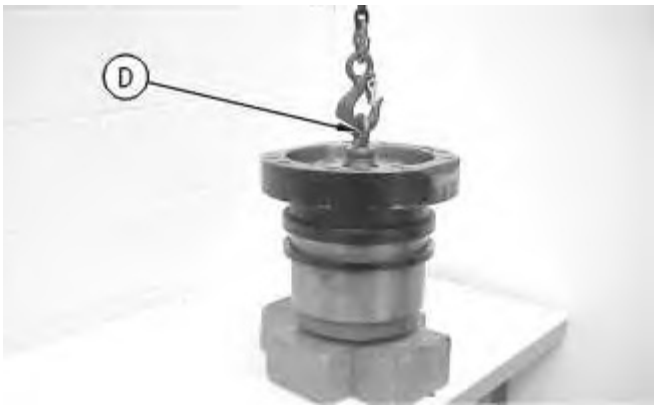

Illustration 16 g00626837

17. Attach Tooling (D) to the shaft. Use a suitable lifting device in order to place barrel assembly into the travel motor body.

    Note: Align the notches of the cam plate with the keys in the travel motor body before you lower the barrel assembly into the travel motor body.

Illustration 17 g01204938

18. Use Tooling (M) to measure the depth from the top surface of the travel motor body to the bronze face of the barrel assembly. The distance should be 32.2 ± 2 mm (1.27 ± 0.08 inch). If this measurement is off, check orientation of the barrel assembly. Also check if the cam plate is properly seated on the keys.

BUY NOW

PayPal VISA MasterCard DISCOVER AMERICAN EXPRESS

Download the full PDF manual instantly.

Our customer service e-mail:

aservicemanualpdf@yahoo.com