Page Title	Page Number
Engine & Equipment	010-0005
Alternator & Bracket	010-0010
Alternator - 120 Amp	010-0015
Alternator - 150 Amp	010-0020
Starter - Up To N093021	010-0025
Starter - From N093022	010-0030
Cylinder Block	010-0035
Timing Gear Housing	010-0040
Flywheel & Flywheel Housing	010-0045
Crankshaft, Piston & Connecting Rods	010-0050
Valve Mechanism And Camshaft	010-0055
Cylinder Head	010-0060
Cylinder Head Cover - Up to Serial or Engine Number - P12176	010-0065
Cylinder Head Cover - From Serial or Engine Number - P12177	010-0070
Thermostat	010-0075
Oil Sump	010-0080
Lubricating Oil Pump	010-0085
Lubricating Oil Cooler And Filter	010-0090
Water Pump	010-0095
Injection System	010-0100
Injection System	010-0105
Low Pressure Fuel System	010-0110
Air Induction & Exhaust	010-0115
Turbocharger - Pipes	010-0120
Electronic Engine Management	010-0125
Engine Repair Kits - Piston- Cylinder Head With Valves	010-0130
Engine Gaskets Sets	010-0135
Heater Engine Block - 220 V	010-0140
Heater Engine Block - 110 V	010-0145
Cab Heating System - Engine Part	010-0150
Fuel Tank & Attachments - All Markets - Except For The United States Up To ...	010-0155
Fuel Tank & Attachments - From ... - United States only	010-0160
Fuel Tank & Attachments - From ... - United States only	010-0165
Fuel System	010-0170
Fuel Pipes	010-0175
Batteries And Cables - Up To Serial N145024 - Without Battery Cut-Off W/O Positive Connection	010-0180
Batteries And Cables - Without Battery Cut-Off With Positive Connection U p To M322008	010-0185
Batteries And Cables - Up To Serial N145024 - With Battery Cut-Off W/O Positive Connection	010-0190
Batteries And Cables - From M322009-Up To N145024 - Battery Cut-Off With Positive Connection	010-0195
Batteries And Cables - From No N145025 - Without Battery Cut-Off	010-0200
Batteries And Cables - From No N145025 - With Battery Cut-Off	010-0205
Cooling System - Air Conditioned Installation	010-0210
Compresser	010-0215
Cooling System - Engine	010-0220
Cooling System - Engine	010-0225
Air Filter - Dry - Dual Element	010-0230
Vertical Exhaust On The Side	010-0235
Throttle Controls	010-0240
Throttle Controls	010-0245

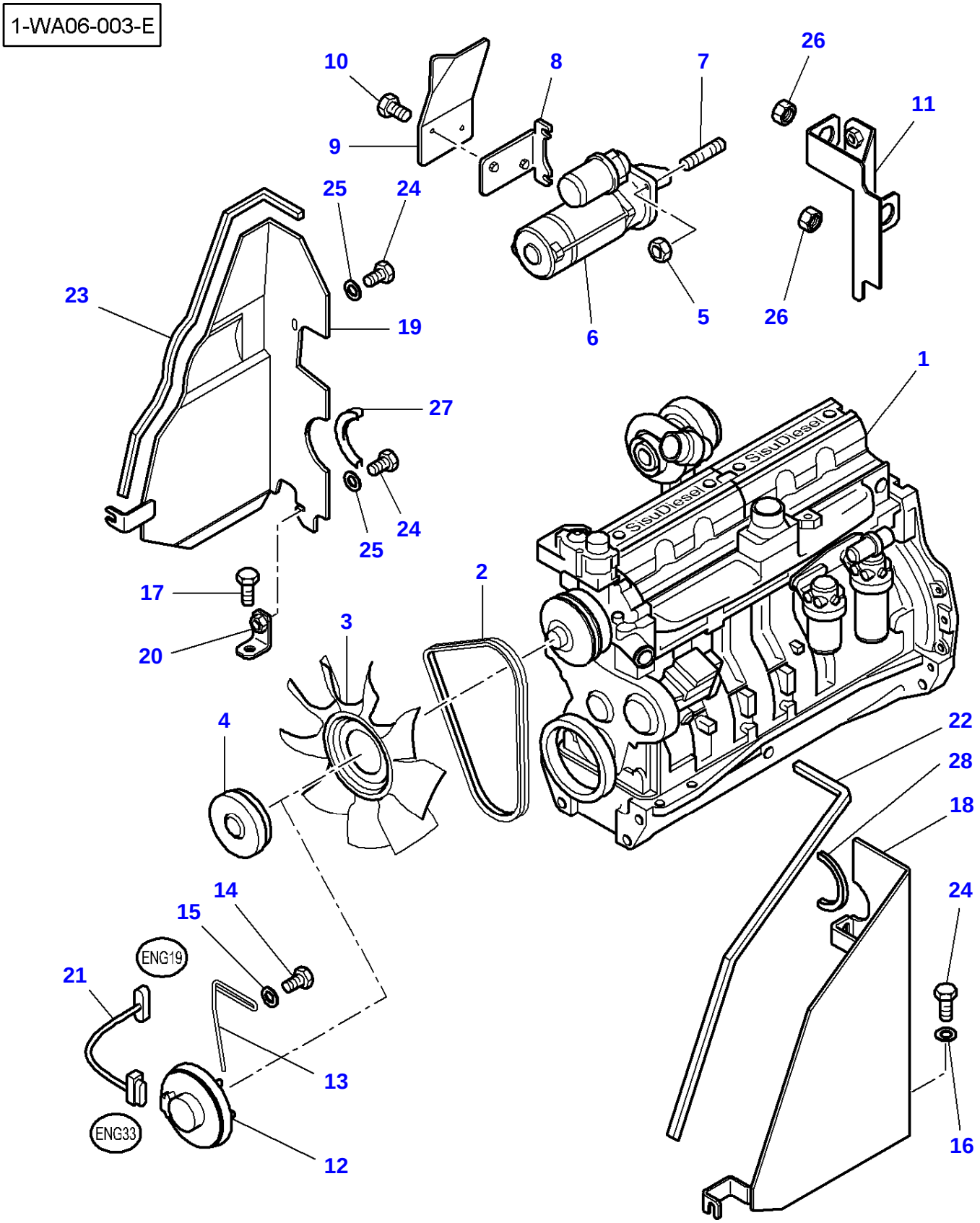
1-WA06-003-E
10
8
7
26
11
9
25
24
23
19
6
5
26
1
27
SisuDiesel
SisuDiesel
24
25
2
17
3
20
4
22
28
18
14
15
24
ENG19
21
13
ENG33
12
16

Item	Part Number	Qty	Description	Comments
1	V832761696	1	Engine	MF 7485 Replace and repair. Old interchangeable with new 4271277M1
	V862761366X	1	Short Engine	[A] MF 7485 Up to Serial or Engine Number R019053
	V832761698	1	Engine	MF 7490 Replace and repair. Old interchangeable with new 4271278M1
	V862761411X	1	Short Engine	[A] MF 7490 Up to Serial or Engine Number P341016
	V862761696X	1	Short Engine	MF 7485 From Serial or Engine Number R019054
	V862761698X	1	Short Engine	MF 7490 From Serial or Engine Number P341017
2	**4273187M1**	1	Belt	[B] Length 1730 mm
	4273188M1	1	Belt	[C] Length 1745 mm
3	3786157M1	1	Fan	
4	3786156M2	1	Clutch	Up to Serial or Engine Number N295044
5	339402X1	3	Nut	M10
6	3823621M91	1	Startermotor	Replace and repair. Old not interchangeable with new 3784889M2
7	391005X1	3	Stud	M10 X 25
8	3781101M2	1	Support	
9	3781102M6	1	Cowl	[D]
10	339228X1	2	Hex. Sock. Screw	M8 X 12
11	4271382M3	1	Cowl	
12	3789256M1	1	Clutch	[A] From Serial or Engine Number 04-OCT-2004
13	4271841M1	1	Support	[A]
14	339123X1	2	Hex. Sock. Screw	[A] M8 X 20
15	391039X1	2	Washer Metric	[A] Diameter 8-24 X 2
16	391039X1	3	Washer Metric	
17	339228X1	1	Hex. Sock. Screw	Up to Serial or Engine Number 02-JAN-2005 M8 X 12
	339228X1	2	Hex. Sock. Screw	From Serial or Engine Number 03-JAN-2005 M8 X 12
18	4271035M4	1	Cowl	
19	4271036M5	1	Cowl	
20	4271037M1	1	Strap	
21	4272811M3	1	Harness	[A]
22	3782183M1	1	Gasket	Length 530 mm
23	4272088M1	1	Staple	Length 685 mm
24	391074X1	3	Hex. Sock. Screw	M6 X 12
25	391039X1	3	Washer Metric	Up to Serial or Engine Number 02-JAN-2005
	391039X1	2	Washer Metric	From Serial or Engine Number 03-JAN-2005
26	1441932X1	2	Nut Metric	M10
27	3782735M1	1	Gasket	Length 140 mm
28	4271654M1	1	Gasket	Length 75 mm

FOOTNOTE [A] WITH VISTRONIC FAN
FOOTNOTE [B] WITH ALTERNATOR 120 AMP
FOOTNOTE [C] WITH ALTERNATOR 150 AMP
FOOTNOTE [D] THE APPROPRIATE SAFETY DECALS MUST BE ORDERED AND FITTED TO THIS PART

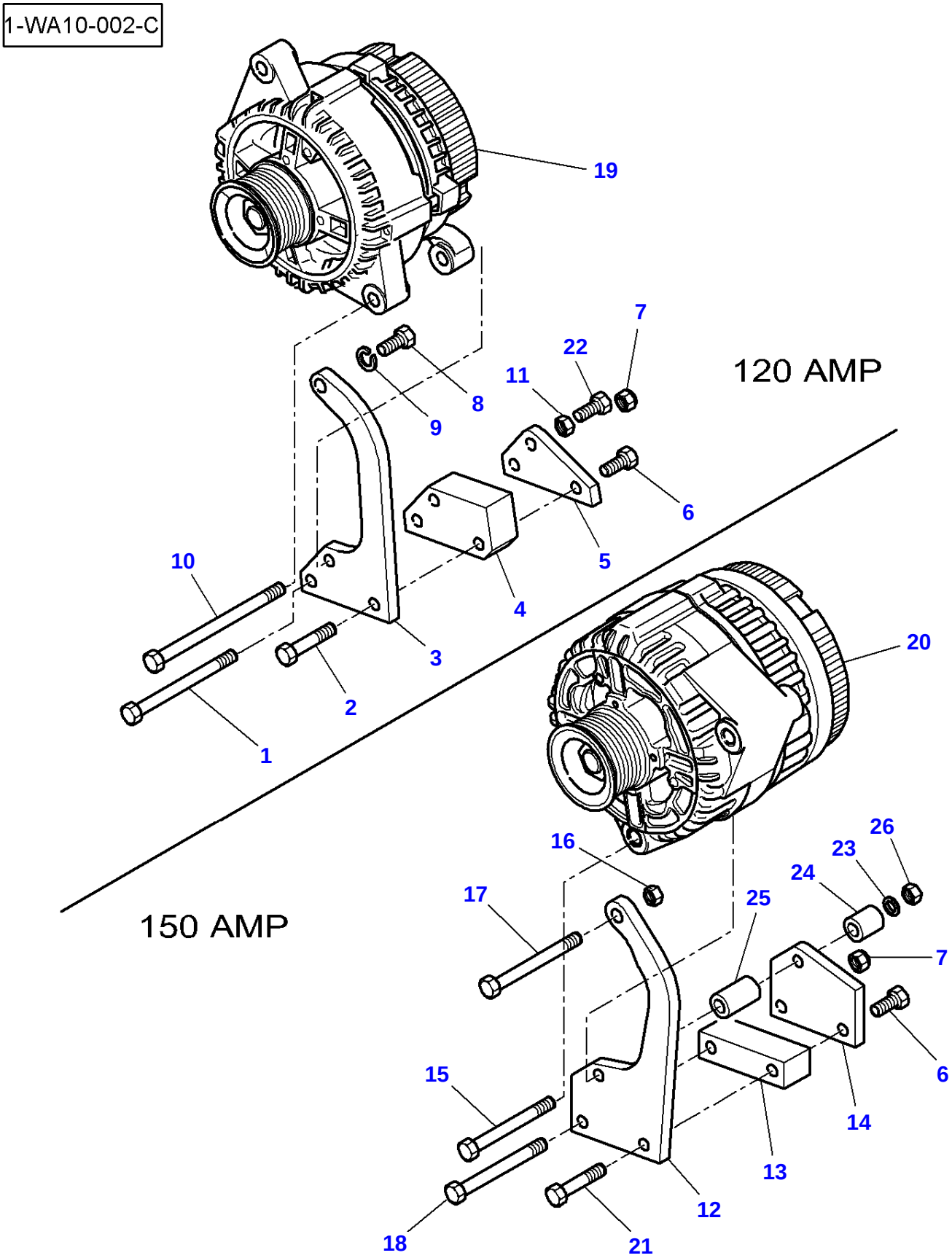
1-WA10-002-C
19
7
22
11
8
9
120 AMP
6
5
10
4
3
2
1
20
16
26
23
24
17
25
7
6
15
14
13
12
18
21
150 AMP

Alternator & Bracket

Item	Part Number	Qty	Description	Comments
1	339084X1	1	Hex. Sock. Screw	M8 X 100
2	339011X1	1	Hex. Sock. Screw	M8 X 45
3	4273236M2	1	Support	
4	4273237M2	1	Support	
5	4273238M2	1	Support	
6	339123X1	1	Hex. Sock. Screw	M8 X 20
	339761X1	1	Hex. Sock. Screw	M8 X 25
7	394367X1	1	Locknut	M8
8	339761X1	1	Hex. Sock. Screw	M8 X 25
9	339374X1	1	Lock Washer	
10	391245X1	1	Hex. Sock. Screw	Up to Serial or Engine Number P080035 M8 X 130
	339010X1	1	Hex. Sock. Screw	From Serial or Engine Number P080036 M8 X 40
11	339169X1	1	Nut	Up to Serial or Engine Number P080035 M8
12	4271377M2	1	Support	
13	4271379M1	1	Spacer	
14	4271378M2	1	Support	
15	339557X1	1	Hex. Sock. Screw	M8 X 120
	1442487X1	1	Hex. Sock. Screw	M10 X 130
16	339402X1	1	Nut	M10
17	3009502X1	1	Hex. Sock. Screw	M10 X 80
18	339557X1	1	Hex. Sock. Screw	M8 X 120
19	4271312M91	1	Alternator	120 Amp See Page - Reference Number 010-0015/1
20	3789453M91	1	Alternator	150 Amp See Page - Reference Number 010-0020/1
21	390246X1	1	Hex. Sock. Screw	M8 X 70
22	339010X1	1	Hex. Sock. Screw	From Serial or Engine Number P080036 M8 X 40
23	339424X1	1	Washer	From Serial or Engine Number P097070 M10
24	4282164M1	1	Spacer	From Serial or Engine Number P097070 Diameter 10,3-15 X 18
25	3389751M1	1	Spacer	Diameter 11-15 X 24
26	394367X1	1	Locknut	M8
	339402X1	1	Nut	M10

1-WC35-007-A

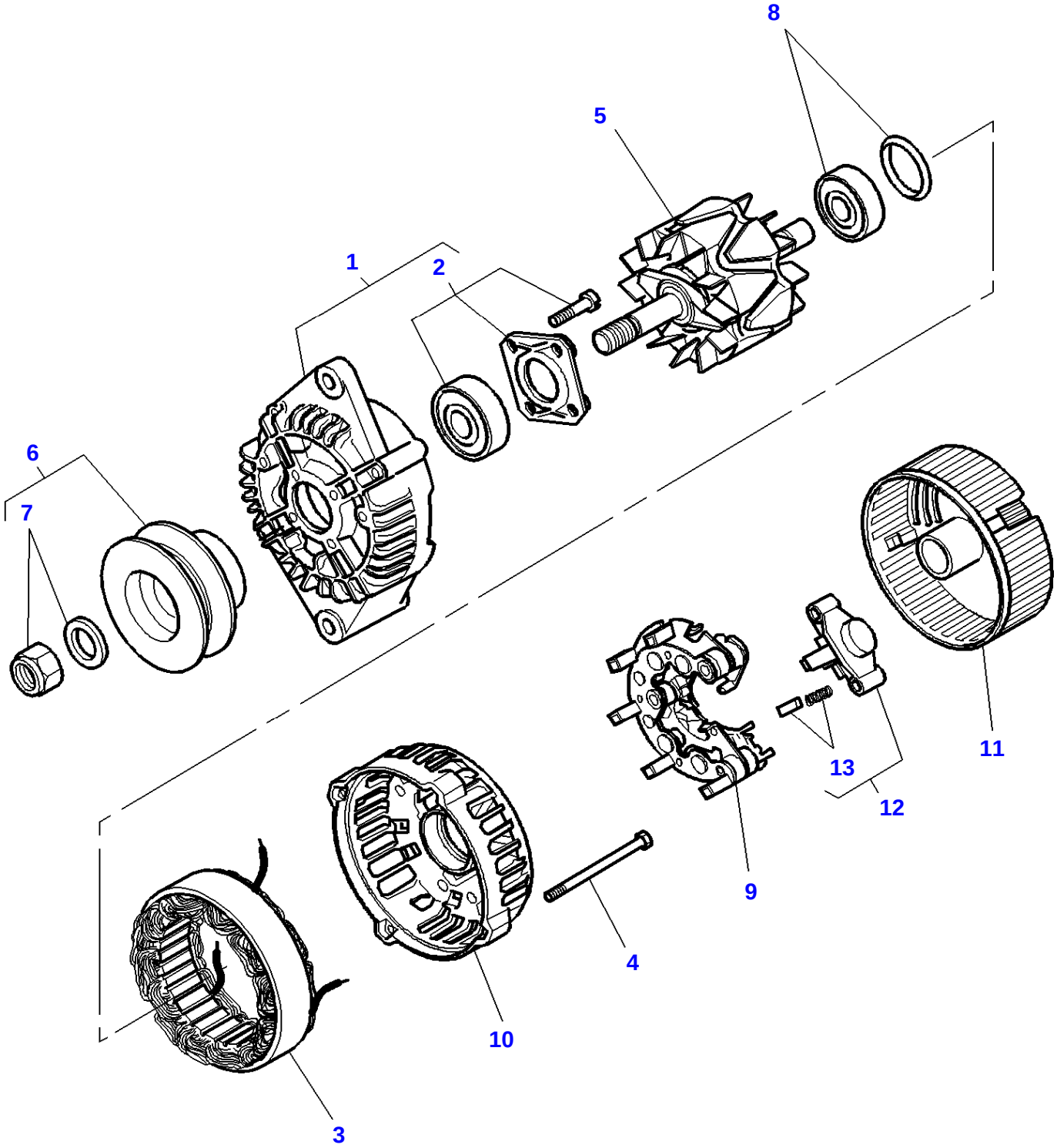

Alternator - 120 Amp

Item	Part Number	Qty	Description	Comments
	4271312M91	1	Alternator	
1		1	Kit, Drive	Not serviced,order REF. 0
2	3904379M91	1	Kit, Bearing	(1)
3		1	Stator	Not serviced,order REF. 0
4	3904380M91	1	Kit, Bolt	
5		1	Rotor	Not serviced,order REF. 0
6	3907154M91	1	Pulley	
7		1	Parts Pack	(6)
				Not serviced,order REF. 6
8	3904382M91	1	Kit, Bearing	
9	3903829M91	1	Rectifier	
10		1	Housing	Not serviced,order REF. 0
11	3904384M1	1	Cover	
12	3904385M91	1	Regulator	
13		1	Brush	(12)
				Not serviced,order REF. 12

1-WH01-001-B

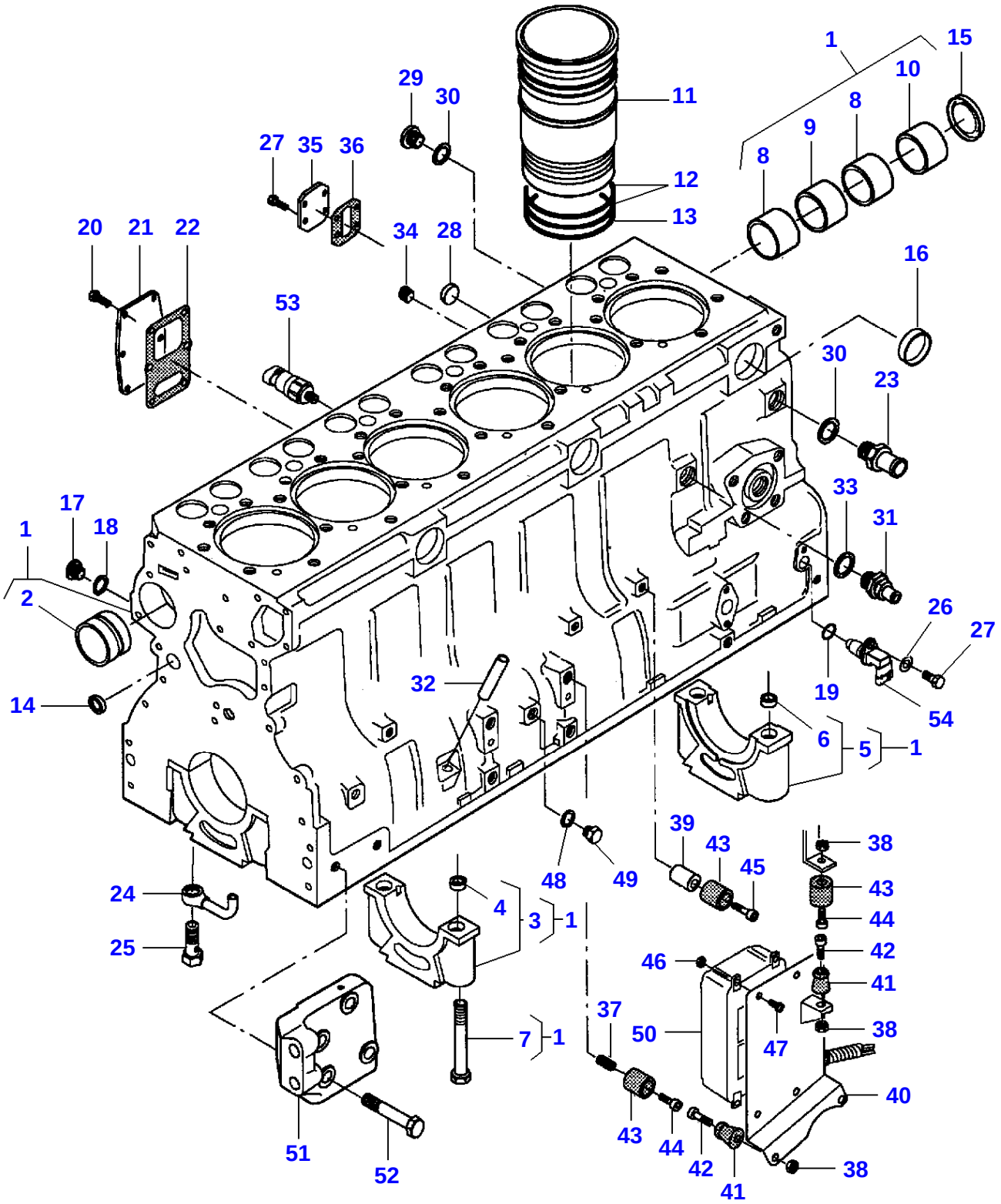
1
15
10
8
9
8
11
12
13
29
30
27
35
36
34
28
20
21
22
53
16
30
23
33
31
17
18
1
2
26
27
54
19
14
32
6
5
1
39
43
45
38
48
49
43
44
24
4
3
1
42
25
46
41
37
38
50
47
7
1
40
43
44
42
41
38
51
52

Item	Part Number	Qty	Description	Comments
1	V836866110	1	Cylinder Block	
2	V836866069	1	Bush	(1)
3		6	Bearing Carrier	(1)
				Not serviced,order REF. 1
4	V836214478	12	Bush	(3)
5		1	Bearing Carrier	(1)
				Not serviced,order REF. 1
6	V836214478	2	Bush	(5)
7	V529903180	14	Screw	(1)
8	V836852460	2	Bush	(1)
9	V836852459	1	Bush	(1)
10	V836852461	1	Bush	(1)
11	V836666990	6	Liner	
	V836647933	X	Liner	Thickness 9,08 mm
	V836647934	X	Liner	Thickness 9,13 mm
	V836647935	X	Liner	Thickness 9,23 mm
12	V836647502	12	O Ring	
13	V836647503	6	O Ring	
14	V640016016	4	Plug	
15	V836852744	1	Plug	
16	V640016040	3	Plug	
17	V640325110	3	Plug	
18	V615871014	4	O Ring	
19	VKH7070	1	O Ring	
20	V528801380	6	Screw	M8 X 20
21	V836846444	1	Flange	
22	V836322852	1	Gasket	
23	V836119837	1	Union	
24	V836846231	6	Pipe	Up to Serial or Engine Number P12179 - MF7485
				Up to Serial or Engine Number P16985 - MF7490
	V836855093	6	Pipe	From Serial or Engine Number P12180 - MF7485
				From Serial or Engine Number P16986 - MF7490
25	V836338601	6	Valve	
26	V500050840	1	Washer	
27	V528801362	5	Screw	M8 X 16
28	V640016018	1	Plug	
29	V640325018	1	Plug	
30	V615881822	2	Seal	
31	V836664377	1	Cock	
32	V836014334	1	Pipe	Up to Serial or Engine Number P12179 - MF7485
				Up to Serial or Engine Number P16985 - MF7490
	V836666910	1	Pipe	From Serial or Engine Number P12180 - MF7485
				From Serial or Engine Number P16986 - MF7490
33	V615881824	1	Seal	
34	V640025010	1	Plug	
35	V836866957	1	Cover	
36	V836866958	1	Gasket	
37	V836859153	1	Nipple	
38	V510600802	4	Nut	M8
39	V836136475	1	Bush	
40	V836866417	1	Bracket	Up to Serial or Engine Number N 13612
	V836867134	1	Bracket	From Serial or Engine Number N 13613
41	V836666095	3	Knob	
42	V581804630	3	Screw	M8 X 30
43	V836666094	3	Bush	
44	V581804580	2	Screw	M8 X 16
45	V581804640	1	Screw	M8 X 35
46	V510600502	4	Nut	M5
				Up to Serial or Engine Number N 13612
47	V572503382	4	Screw	M5 X 16
				Up to Serial or Engine Number N 13612
	V572504172	4	Screw	M6 X 12
				From Serial or Engine Number N 13613
48	V615881216	1	Gasket	
49	V640045112	1	Plug	
50		1	Control Unit	See Page - Reference Number 010-0125/1
51	V836864529	1	Support	Left Hand
	V836864530	1	Support	Right Hand
52	V529902680	8	Screw	M14 X 65
53	**V836866613**	1	Sensor	See Page - Reference Number 010-0125/3

Item	Part Number	Qty	Description	Comments
54	**V836866392**	1	Eng.Speed Sensor	See Page - Reference Number 010-0125/5

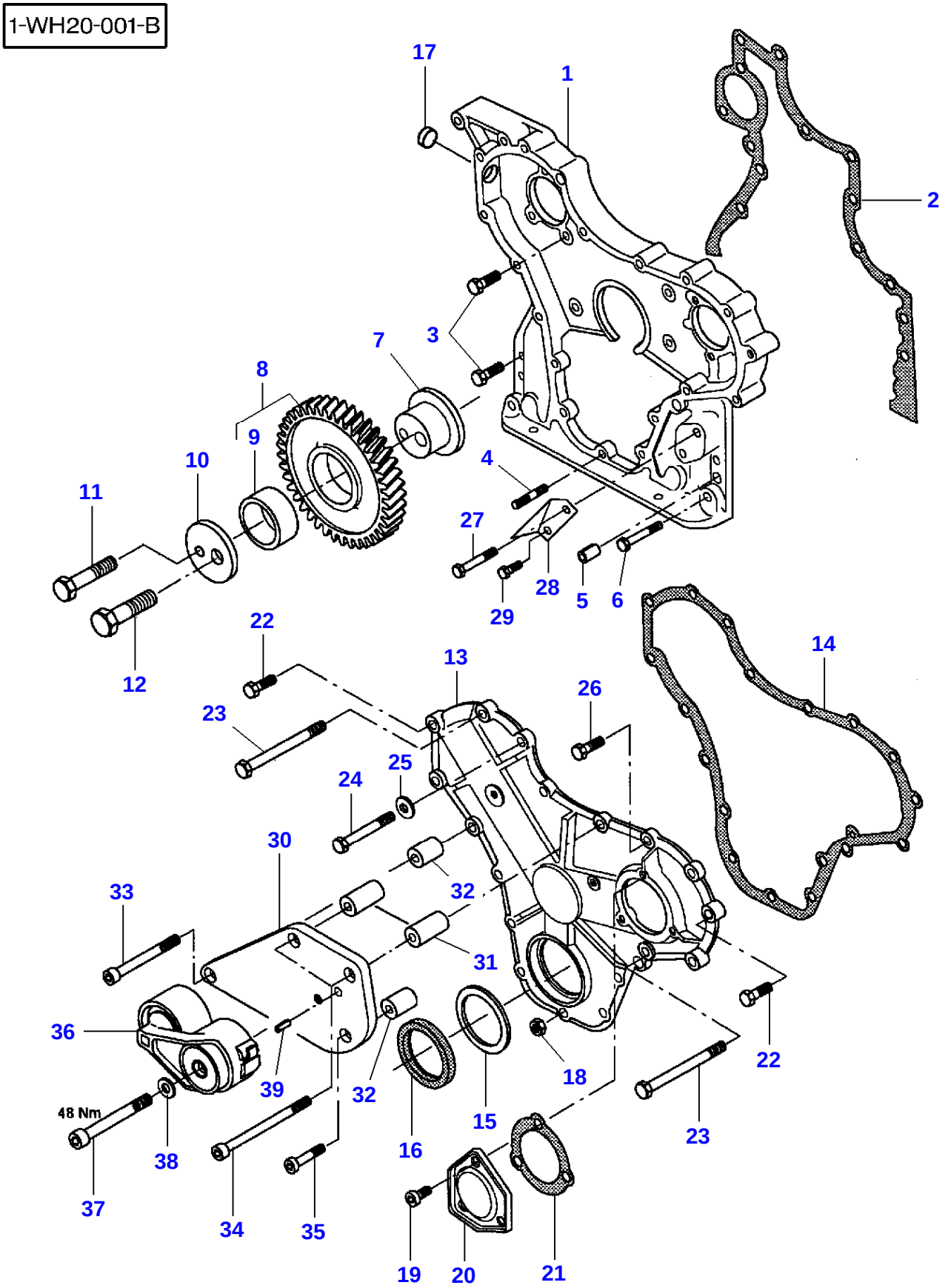
1-WH20-001-B
17
1
2
3
7
8
9
10
11
4
27
28
29
5
6
12
22
13
14
26
23
25
24
30
33
32
31
36
39
32
18
22
48 Nm
38
15
23
16
37
34
35
19
20
21

Timing Gear Housing

Item	Part Number	Qty	Description	Comments
1	V836666400	1	Timing Gear Case	
2	V836647419	1	Gasket	
3	V528801400	9	Screw	M8 X 25
4	V546801380	5	Bolt	M8 X 20
5	V598359850	4	Pin	
6	V529801440	2	Screw	M8 X 45
7	V836129709	1	Shaft	
8	V836129863	1	Gear	
9	V836129844	1	Bush	(8)
10	V836129845	1	Flange	
11	V528801860	4	Screw	M10 X 55
12	V529902680	1	Screw	M14 X 65
13	V836647572	1	Cover	
14	V836129942	1	Gasket	
15	V836129782	1	Chock	
	V835328899	1	Chock	Thickness 3,00 mm
16	V614105880	1	Seal	
17	V640016016	1	Plug	
18	V504800800	5	Nut	M8
19	V581804570	3	Screw	M8 X 12
20	V836136717	1	Cover	
21	V836129946	1	Gasket	
22	V528801420	3	Screw	M8 X 35
23	V529801500	2	Screw	M8 X 75
24	V529801470	1	Screw	M8 X 60
25	V836120989	1	Washer	
26	V528801380	2	Screw	M8 X 20
27	V529801450	1	Screw	M8 X 50
28	V836652318	1	Angle.	
29	V528801362	1	Screw	M8 X 16
30	V836866857	1	Plate	
31	V836328372	2	Distance Piece	
32	V836652095	2	Sleeve	
33	V581804702	1	Screw	M8 X 65
34	V581704770	2	Screw	M8 X 100
35	V581804640	1	Screw	M8 X 35
36	V836667411	1	Tightener	
37	V581705130	1	Screw	M10 X 80
38	V500951000	1	Washer	
39	V595954600	1	Pin	

1-WA07-009-A

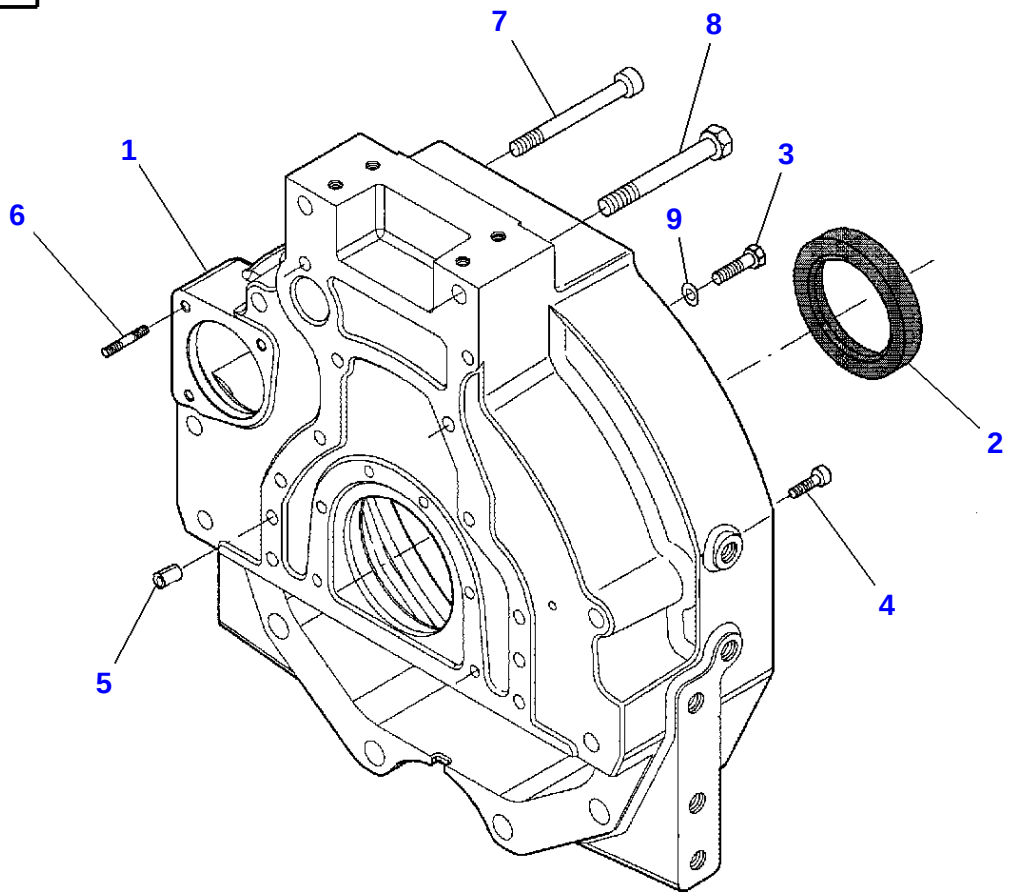

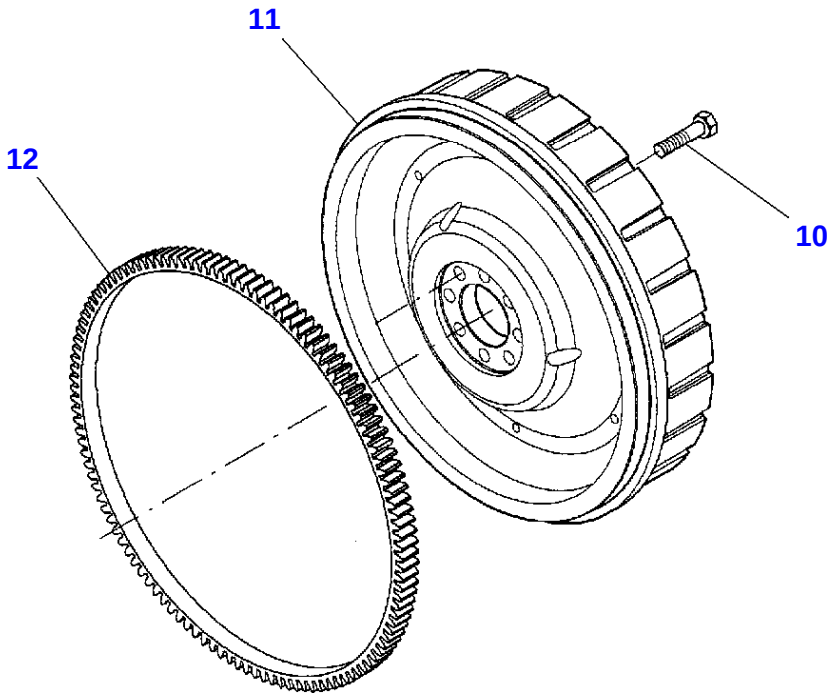

Flywheel & Flywheel Housing

Item	Part Number	Qty	Description	Comments
1	V836866386	1	Housing	
2	**V614500002**	1	Seal	
3	V528702230	8	Screw	M12 X 40
4	V581705030	6	Screw	M10 X 30
5	V598359850	2	Pin	
6	V546801800	3	Bolt	M10 X 25 Up to Serial or Engine Number P12179 - MF7485 Up to Serial or Engine Number P16985 - MF7490
	V546801815	3	Stud	From Serial or Engine Number P12180 - MF7485 From Serial or Engine Number P16986 - MF7490 M10 X 30
7	V581705580	2	Screw	M12 X 110
8	V529903160	2	Screw	M16 X 110
9	V500951200	8	Washer	
10	V528702230	8	Screw	
11	V836866385	1	Flywheel	
12	V836659026	1	Annular Gear	

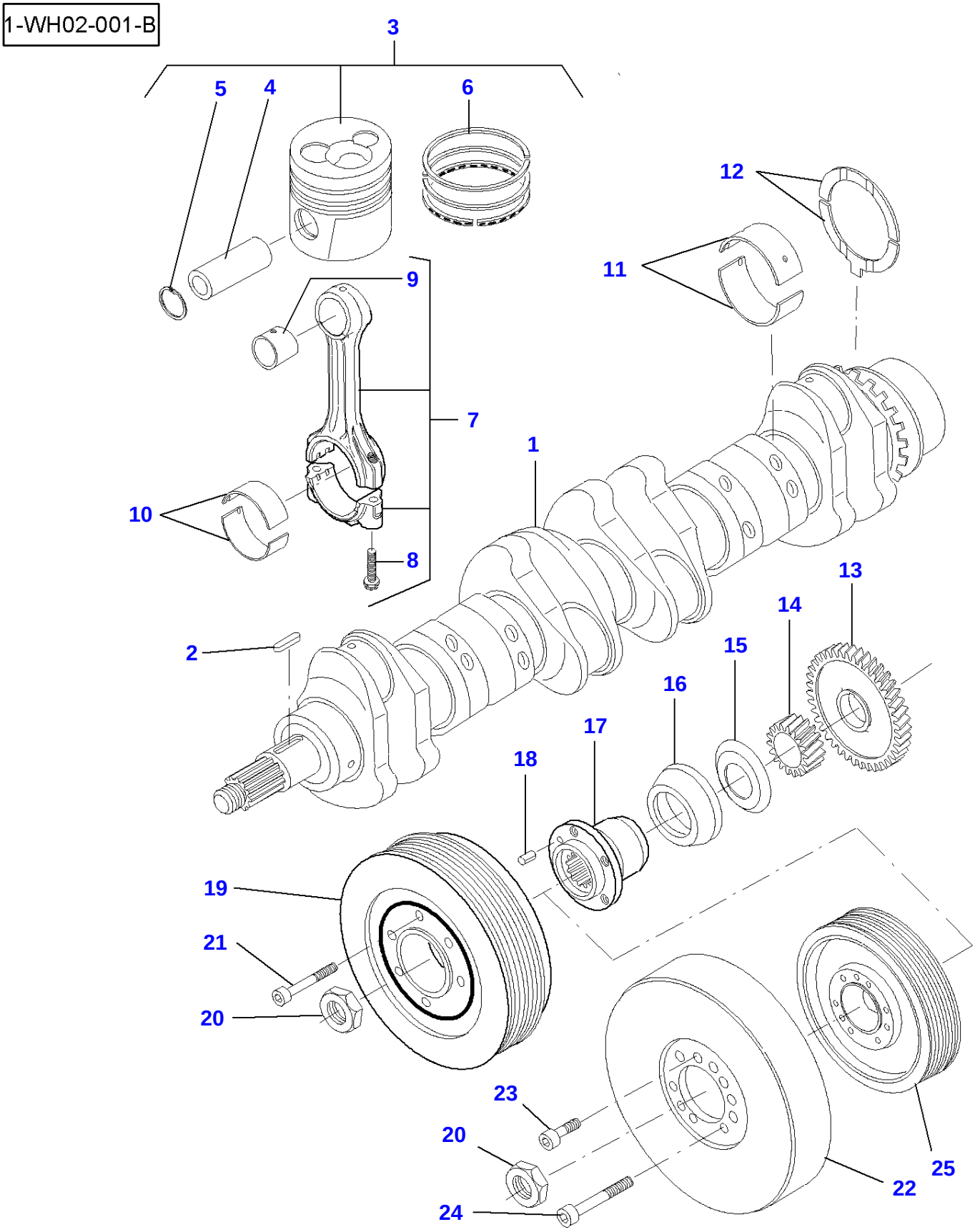
1-WH02-001-B
3
5
4
6
12
11
9
7
1
10
8
13
14
2
15
16
17
18
19
21
20
23
20
24
22
25

Item	Part Number	Qty	Description	Comments
1	V836866474	1	Crankshaft	
2	V603345110	1	Key	
3	V836666103	6	Piston	
4		6	Piston Pin	(3) Not serviced,order REF. 3
5		12	Circlip	(3) Not serviced,order REF. 3
6	V836640078	6	Kit, Piston Ring	(3)
7	V836840928	1	Kit, Conrod	
	V836666430	6	Conrod	1935-1954g F
	V836666431	X	Conrod	1955-1974g V
	V836666432	X	Conrod	1975-1994g X
	V836666433	X	Conrod	1995-2014g Y
	V836666434	X	Conrod	2015-2034g W
	V836666435	X	Conrod	2035-2054g Z
	V836666436	X	Conrod	2055-2074g G
8	V836864141	12	Screw	(7) TORX E18
9	V836110646	6	Bush	(7)
10	V836110552	6	Bearing	STANDARD Diameter 67,981 mm 68,000 mm
	V836112762	X	Bearing	Diameter 67,731 mm 67,750 mm
	V836112763	X	Bearing	Diameter 67,481 mm 67,500 mm
	V836112765	X	Bearing	Diameter 66,981 mm 67,000 mm
	V836112767	X	Bearing	Diameter 66,481 mm 66,500 mm
	V836140950	X	Bearing	Diameter OUTER 1,00 mm INNER 0,50 mm
11	V836655514	7	Main Bearing	STANDARD Diameter 84,985 mm 85,020 mm
	V836655536	X	Main Bearing	Diameter 84,735 mm 84,770 mm
	V836655537	X	Main Bearing	Diameter 84,485 mm 84,520 mm
	V836655538	X	Main Bearing	Diameter 83,985 mm 84,020 mm
	V836655539	X	Main Bearing	Diameter 83,485 mm 83,520 mm
12	V836119459	2	Chock	STANDARD
	V836120332	X	Thrust Washer	Thickness 0,10 mm
	V836120333	X	Thrust Washer	Thickness 0,20 mm
13	V836119550	1	Pinion	
14	V836122840	1	Pinion	
15	V836129781	1	Slinger	
16	V836136271	1	Bush	Up to Serial or Engine Number P11836
17	V836846463	1	Hub	
18	V595953360	1	Pin	
19	V836866625	1	Pulley	Up to Serial or Engine Number R19079
20	V836647310	1	Nut	
21	V581804670	6	Screw	M8 X 50
22	V836840867	1	Damper	From Serial or Engine Number R19080
23	V581904620	3	Screw	M8 X 25
24	V581804710	6	Screw	M8 X 70
25	V836867771	1	Pulley	From Serial or Engine Number R19080

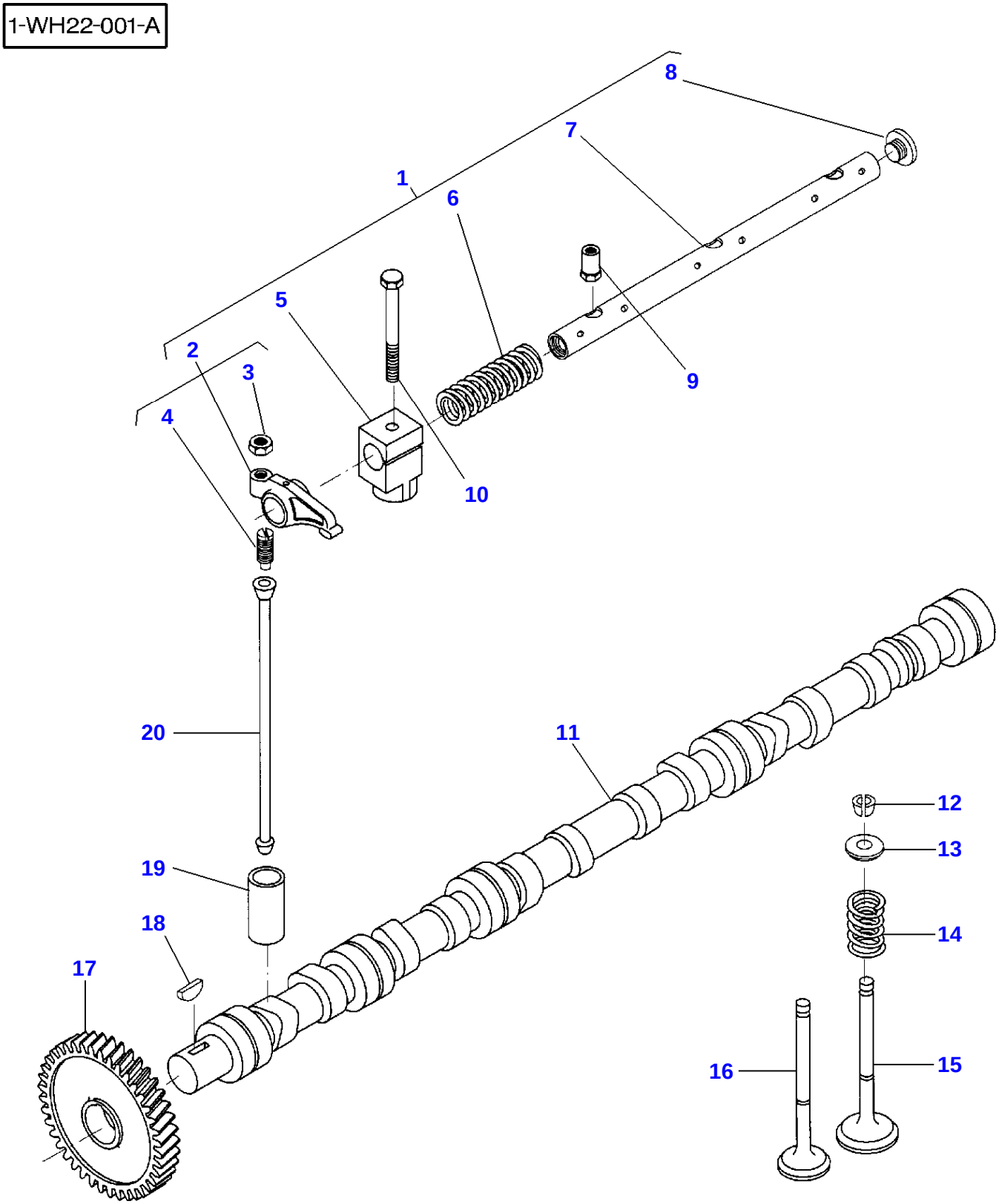
1-WH22-001-A
1
2
3
4
5
6
7
8
9
10
11
12
13
14
15
16
17
18
19
20

Valve Mechanism And Camshaft

Item	Part Number	Qty	Description	Comments
1	V836666610	2	Rocker Shaft	
2	V836666608	12	Rocker	(1)
3	V512861000	12	Nut	(2)
4	V836655866	12	Adjusting Screw	(2)
5	V836666609	6	Bracket	(1)
6	V836655884	4	Spring	(1)
7	V836655870	2	Shaft	(1)
8	V836655899	4	Plug	(1)
9	V836655406	4	Nut	
10	V529801910	2	Screw	M10 X 80
11	V836862528	1	Camshaft	Replace and repair. Old not interchangeable with new V836866054
12	V836646382	24	Cotter	
13	V836646381	12	Cup	
14	V836646380	12	Spring	
15	V836646356	6	Inlet Valve	
16	V836646357	6	Exhaust Valve	
17	V836646389	1	Gear	
18	V603305760	1	Key	
19	V836014264	12	Tappet	
20	V836655867	12	Rod	

1-WH03-008-A

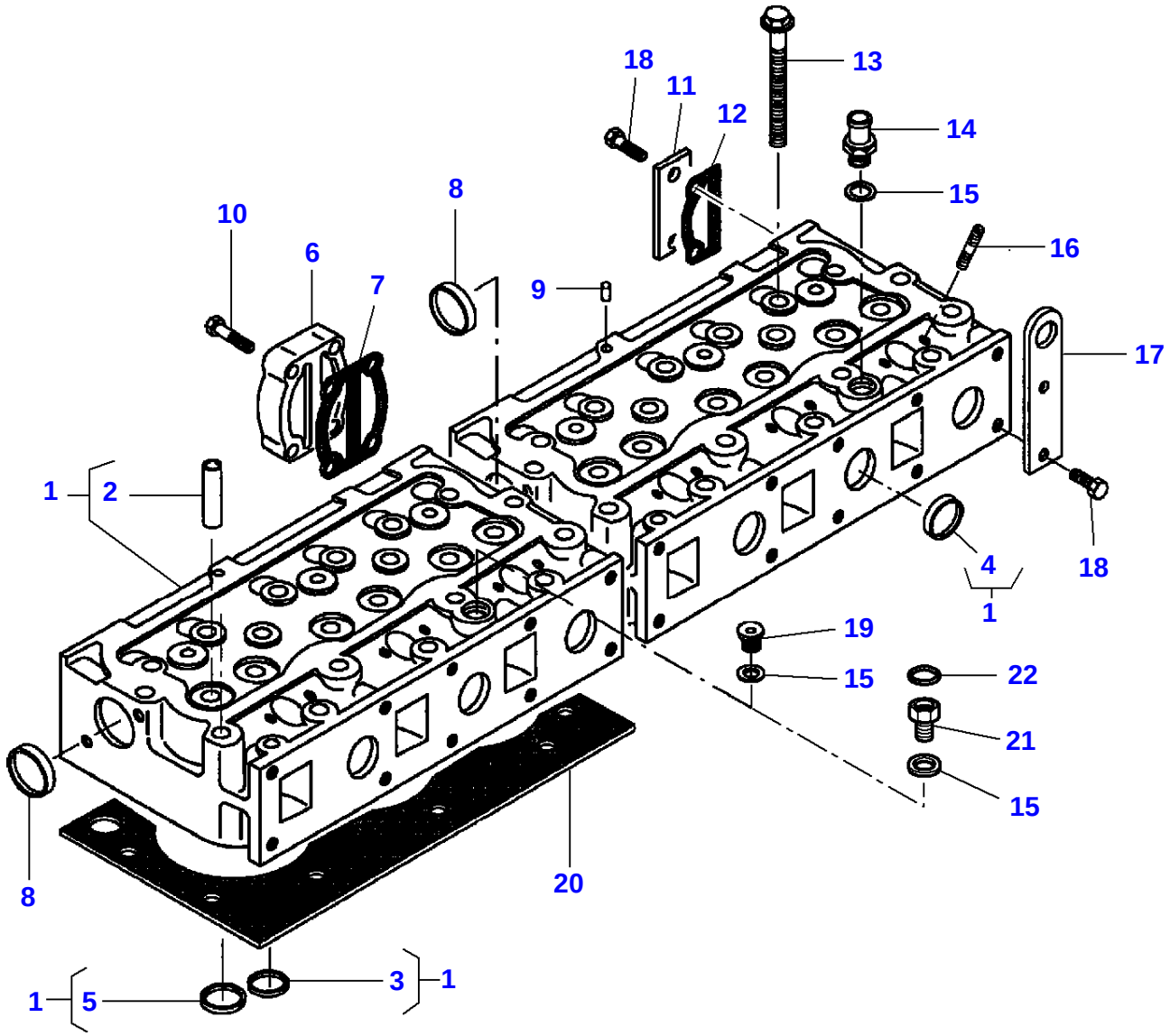

Item	Part Number	Qty	Description	Comments
1	V836855381	2	Cylinder Head	
2	V836647601	12	Guide	(1)
3	V836647600	6	Valve Seat	(1)
4	V836647942	10	Plug	(1)
5	V836647936	6	Valve Seat	(1)
6	V836855348	1	Connector	
7	V836867390	1	Gasket	Replace and repair. Old not interchangeable with new V836866214
8	V640016045	2	Plug	
9	V595959140	2	Pin	Up to Serial or Engine Number P12179 - MF7485 Up to Serial or Engine Number P16985 - MF7490
10	V528801830	4	Screw	M10 X 40
11	V836855350	1	Plate	
12	V836867391	1	Gasket	
13	V836859104	32	Screw	
14	V836119837	1	Union	
15	V615881822	2	Seal	
16	V546901435	12	Stud	M8 X 40
17	V836859722	1	Plate	
18	V528801800	4	Screw	M10 X 25
19	V640325018	1	Plug	Up to Serial or Engine Number P2897
20	V837070290	2	Head Gasket	Replace and repair. Old not interchangeable with new V836666302
21	V836359676	1	Union	From Serial or Engine Number P2898
22	V615871014	1	O Ring	

1-WH23-001-B

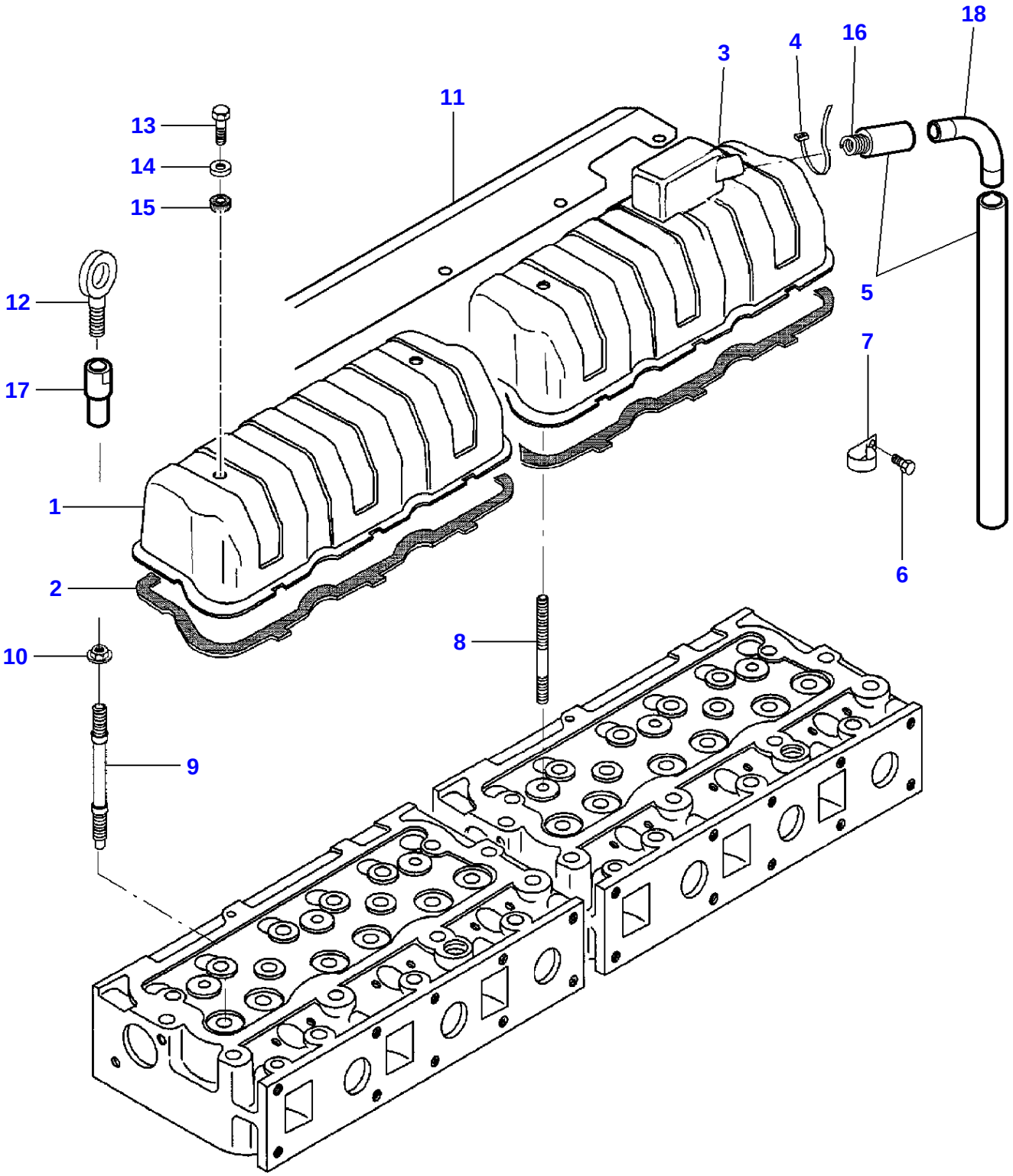

Cylinder Head Cover - Up to Serial or Engine Number P12176

Item	Part Number	Qty	Description	Comments
1	V836846448	1	Valve Cover	
2	**V836646360**	2	Gasket	
3	V836859501	1	Valve Cover	
4	V651754720	1	Cable Tie	
5	V836659529	1	Hose Flexible	
6	V528801760	1	Screw	M10 X 16
7	V836659539	1	Band	
8	V546801900	4	Stud	M10 X 75
9	V836859109	2	Stud	
10	V836859110	2	Nut	
11	V836866524	1	Shield	
12	V836640752	1	Shackle	
13	V528801780	4	Screw	M10 X 20
14	V836119855	4	Washer	
15	**V836012841**	4	Gasket	
16	V836859587	1	Spring	
17	V836666340	1	Nut Special	
18	4275047M1	1	Tube	

1-WH23-003-B

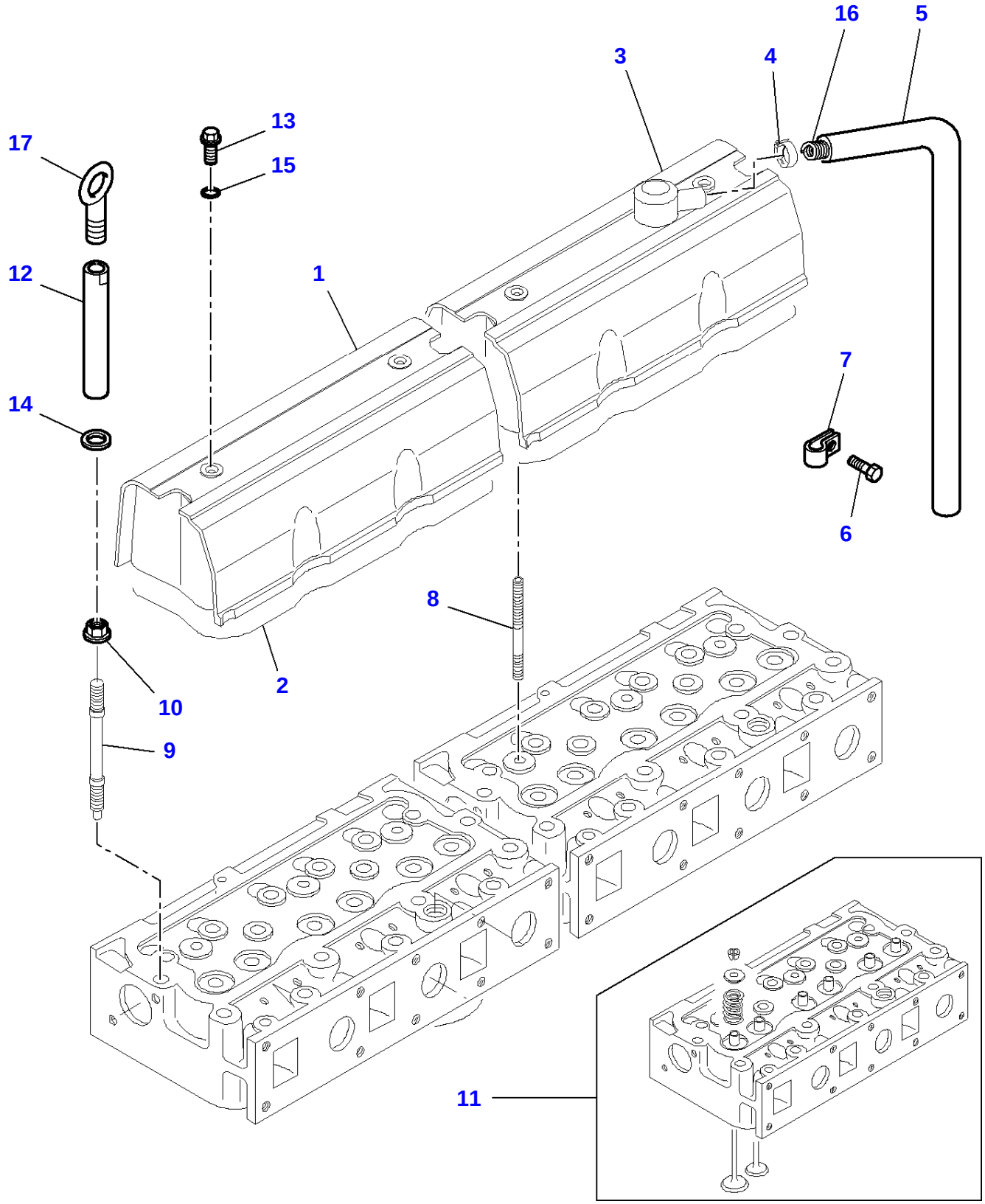

Thank you very much for reading. need complete manual.

Please Go back to the website, at its bottom.

There is a button. BUY NOW...

You can get this complete manual instantly. NO WAITING.

Please click here.

Have questions. Please write to us.
aservicemanuapdf@yahoo.com