Page Title	Page Number
Section Divider	010-0005
Engine	010-0010
Alternator - Valeo	010-0015
Starter - Magneti-Marelli	010-0020
Fan Drive Section - Up To No F044008 United States only	010-0025
Fan Drive Section - From Serial No F044009 United States only	010-0030
Fan And Extension - T6.60 Engine	010-0035
Heater - Engine Block	010-0040
Cylinder Block - Up To No F044008 United States only	010-0045
Cylinder Block - From Serial No F044009 United States only	010-0050
Crankshaft, Pistons And Connecting Rods - Up To No F044008 United States only	010-0055
Crankshaft, Pistons And Connecting Rods - From Serial No F044009 United States only	010-0060
Cylinder Head - Up To No F044008 United States only	010-0065
Cylinder Head - From Serial No F044009 United States only	010-0070
Rocker Shaft - Up To No F044008 United States only	010-0075
Rocker Shaft - From Serial No F044009 United States only	010-0080
Turbocharger - Up To No F044008 United States only	010-0085
Turbocharger - From Serial No F044009 United States only	010-0090
Turbocharger - Inlet And Exhaust Manifold - Up To No F044008 United States only	010-0095
Air Induction And Exhaust System - From Serial No F044009 United States only	010-0100
Air Induction And Exhaust System - From Serial No F044009 United States only	010-0105
Turbocharger - Pipes And Heat Shields - T6.60 Engine	010-0110
Timing Gear And Camshaft - Up To No F044008 United States only	010-0115
Timing Gear And Camshaft - From Serial No F044009 United States only	010-0120
Fuel Injection Equipment (Diesel) - Up To No F044008 United States only	010-0125
Fuel Injection Equipment (Diesel) - From Serial No F044009 United States only	010-0130
Lubricating Oil Filler And Breather - Up To No F044008 United States only	010-0135
Lubricating Oil Filler And Breather - From Serial No F044009 United States only	010-0140
Lubricating Oil Sump - Up To No F044008 United States only	010-0145
Lubricating Oil Sump - From Serial No F044009 United States only	010-0150
Lubricating Oil Filter And Integral Cooler - Up To No F044008 United States only	010-0155
Lubricating Oil Filter And Integral Cooler - From Serial No F044009 United States only	010-0160
Water Pump, Thermostat And Heat Exchanger - Up To No F044008 United States only	010-0165
Water Pump, Thermostat And Heat Exchanger - From Serial No F044009 United States only	010-0170
Low Pressure Fuel System - Up To No F044008 United States only	010-0175
Low Pressure Fuel System - From Serial No F044009 United States only	010-0180
Heater/Starter Switch - From Serial No F044009 United States only	010-0185
Joints And Gaskets - Up To No F044008 United States only	010-0190
Joints And Gaskets - From Serial No F044009 United States only	010-0195
Batteries And Cables - Without Battery Cut-Off	010-0200
Batteries And Cables - Without Battery Cut-Off With Positive Connection	010-0205
Batteries And Cables - With Battery Cut-Off	010-0210
Cooling System - Air Conditioned Installation	010-0215
Cooling System -Air Conditioned - Sanden Compresser	010-0220
Cooling System - Engine	010-0225
Cab Heating System - Engine Part	010-0230
Fuel System - Fuel Tank And Attachments	010-0235
Fuel System - Pipes With Thermostart - Up to Serial or Engine Number - G022012	010-0240
Fuel System - Pipes With Thermostart - From Serial or Engine Number - G022013	010-0245
Fuel System - Pipes With Thermostart - With Additional Tank - Up To G022012	010-0250
Fuel System - Pipes With Thermostart - With Additional Tank - From G022013	010-0255

Fuel System - Fuel Filter	010-0260
Fuel Flowmeter - Up To No F044008 United States only	010-0265
Fuel Flowmeter - From Serial No F044009 United States only	010-0270
Fuel System - Fuel Tank And Attachments - Additional Tank	010-0275
Air Filter - With Thermostart Equipment	010-0280
Air Filter - Dry - Dual Element - Equipment Without Ether	010-0285
Air Filter - Dry - Dual Element	010-0290
Exhaust System - Vertical - Up To No F044008 United States only	010-0295
Exhaust System - Vertical - From Serial No F044009 United States only	010-0300
Exhaust System - Vertical - Platform	010-0305
Throttle Controls	010-0310
Throttle Controls - Up To No F044008 United States only	010-0315
Throttle Controls - From Serial No F044009 United States only	010-0320
Throttle Controls - Hand	010-0325
Hand Throttle Control - Platform	010-0330

1-0560-605-C

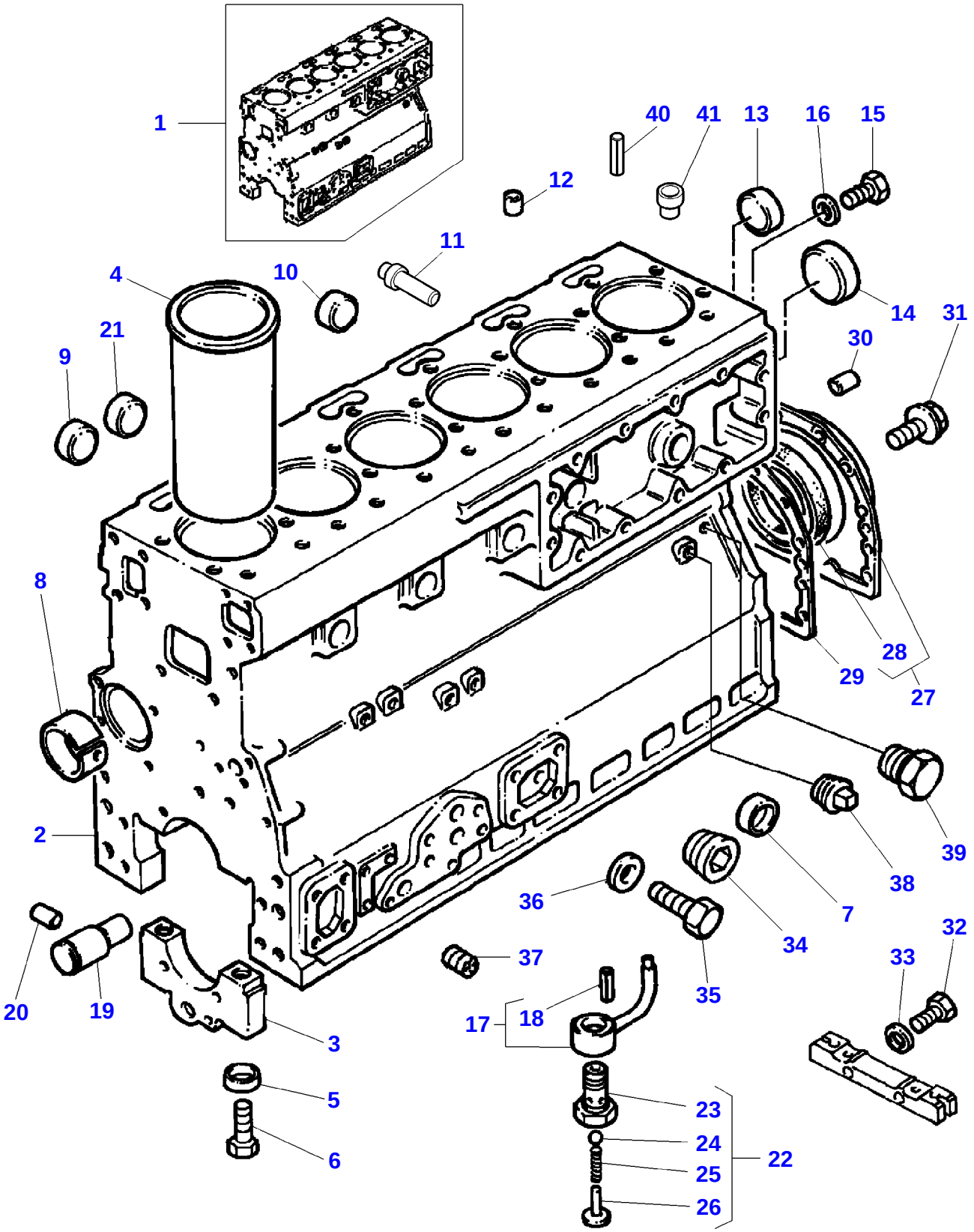
1
40
41
13
16
15
12
11
4
10
14
31
21
30
9
8
28
29
27
2
39
38
36
7
34
32
37
33
35
20
19
17
18
3
5
23
24
22
25
6
26

Item	Part Number	Qty	Description	Comments
1	3641851M91	1	Kit,Cyl.Block	
2		1	Block	(1)
				Not serviced,order REF.1
3		7	Cap	(1)
				Not serviced,order REF.1
4	748216M1	6	Liner	[A]
				(1)
	748215M1	6	Liner	[F]
5	733072M1	14	Ring	(1)
6	1476108X1	14	Screw	(1)
7	746259M1	5	Plug	(1)
8	4222017M1	1	Bush	(1)
9	746259M1	3	Plug	(1)
10	746259M1	5	Plug	(1)
11	1476282X1	1	Plug	(1)
12	736868M1	1	Plug	(1)
13	746259M1	1	Plug	(1)
14	4222043M1	1	Plug	(1)
				Replace and repair. Old not interchangeable with new 3637015M1
15	376180X1	1	Plug	(1)
16	4224555M1	1	Washer	(1)
17	4224385M91	6	Jet	(1)
18	4222512M1	1	Dowel	(17)
19	3641847M1	1	Shaft	(1)
				Replace and repair. Old not interchangeable with new 3637077M1
20	3638414M1	1	Pin	(1)
21	746259M1	3	Plug	(1)
22	3637005M91	6	Valve	(1)
23		1	Body	(22)
				Not serviced,order REF.22
24	3637006M1	1	Ball	(22)
25	748149M1	1	Spring	(22)
26	3637007M1	1	Retainer	(22)
27	3640868M91	1	Housing	
28	1447691M1	1	Seal	(27)
29	4223587M1	1	Joint	
30	731947M1	2	Dowel	
31	3637011M1	12	Screw	
32	3638590M1	2	Screw	Up to Serial or Engine Number U573633Y
	3641756M1	2	Screw	From Serial or Engine Number U573634Y
33	745015M1	2	Washer	Up to Serial or Engine Number U573633Y
34	4224584M1	1	Plug	Replace and repair. Old interchangeable with new 1476192X1
35	3638809M1	1	Screw	
36	1650388M1	1	Washer	
37	748393M1	4	Plug	
38	731996M1	2	Plug	
39	3637016M1	2	Plug	
40	3639268M1	2	Dowel	
41	4222439M1	2	Dowel	(1)

FOOTNOTE [A] SLIP FIT
FOOTNOTE [F] PRESS FIT

1-0560-611-B

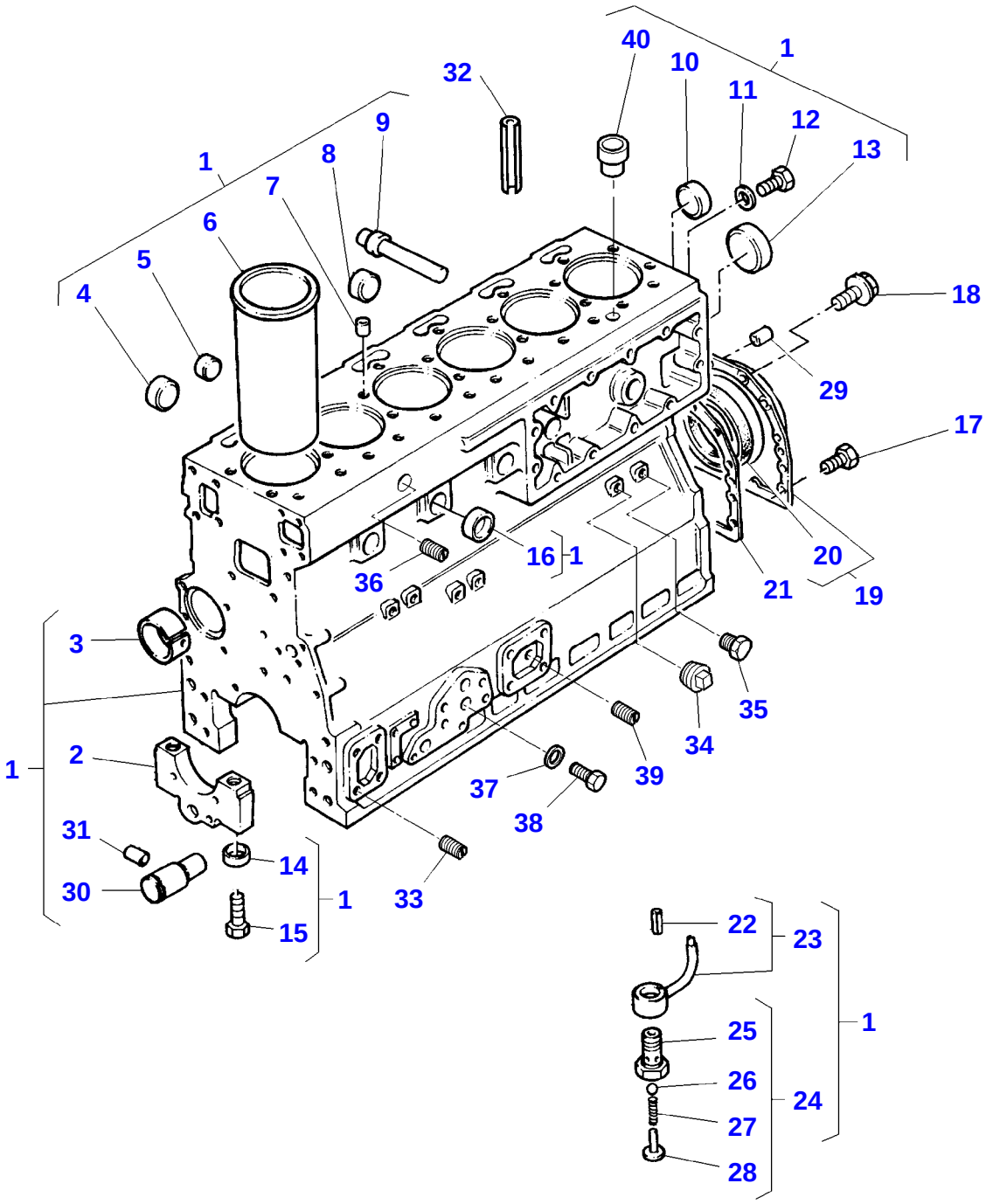
1
40
10
11
12
13
32
9
8
7
6
5
4
18
29
17
16
1
20
21
19
36
3
35
34
2
1
39
37
38
31
14
30
1
33
15
22
23
1
25
26
24
27
28

Cylinder Block - From Serial No F044009 United States only

Item	Part Number	Qty	Description	Comments
1	4222497M91	1	Kit,Cyl.Block	
2		7	Cap	(1)
				Not serviced,order REF . 1
3	4222017M1	1	Bush	(1)
4	746259M1	3	Plug	[D]
				(1)
5	746259M1	3	Plug	[D]
				(1)
6	4222128M1	6	Liner	[B]
	4222129M1	6	Liner	[A]
				(1)
7	736868M1	1	Plug	[G]
				(1)
8	4222012M1	5	Plug	[E]
				(1)
9	1476282X1	1	Plug	[F]
				(1)
10	746259M1	1	Plug	[H]
				(1)
11	4224555M1	1	Washer	(1)
12	376180X1	1	Plug	[I]
				(1)
13	4222043M1	1	Plug	[J]
				(1)
14	733072M1	14	Ring	(1)
15	1476108X1	14	Screw	(1)
16	746259M1	5	Plug	[C]
				(1)
17	3641756M1	2	Screw	
18	3637008M1	12	Screw	
19	3640868M91	1	Housing	
20	1447691M1	1	Seal	(19)
21	4223587M1	1	Joint	
22	4222512M1	1	Dowel	(23)
23	4224385M91	6	Jet	(1)
24	3637005M91	6	Valve	(1)
25		1	Body	(24)
				Not serviced,order REF. 24
26	3637006M1	1	Ball	(24)
27	748149M1	1	Spring	(24)
28	3637007M1	1	Retainer	(24)
29	731947M1	2	Dowel	
30	3641847M1	1	Shaft	(1)
31	3638414M1	1	Pin	
32	3639268M1	2	Dowel	
33	748393M1	4	Plug	
34	731996M1	2	Plug	
35	376670X1	2	Plug	
36	376606X1	1	Plug	
37	1650388M1	1	Washer	
38	3638809M1	1	Screw	
39	4224584M1	1	Plug	Replace and repair. Old interchangeable with new 1476192X1
40	4222439M1	2	Dowel	(1)
				From Serial or Engine Number U647452C

FOOTNOTE [A] UNFINISHED - PRESS FIT
FOOTNOTE [B] FINISHED - SLIP FIT
FOOTNOTE [C] WATER JACKET , LEFT HAND SIDE
FOOTNOTE [D] WATER JACKET , RIGHT HAND SIDE
FOOTNOTE [E] TAPPET CHAMBER
FOOTNOTE [F] ROCKER OIL FEED DRILLING, RIGHT HAND SIDE
FOOTNOTE [G] ROCKER OIL FEED DRILLING, TOP FACE
FOOTNOTE [H] WATER JACKET , REAR FACE
FOOTNOTE [I] LUBRICATING OIL PRESSURE RAIL , REAR END
FOOTNOTE [J] CAMSHAFT CHAMBER, REAR END

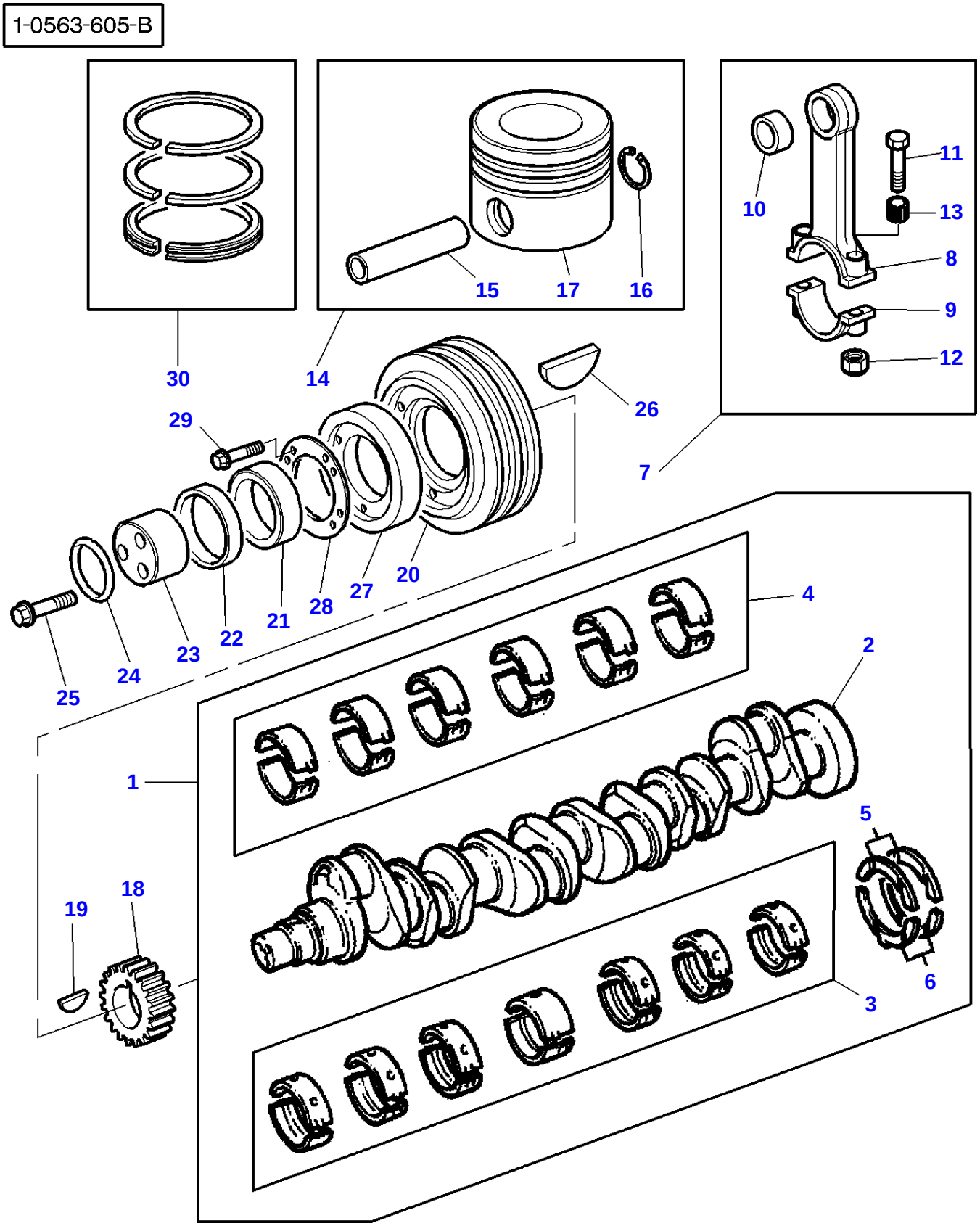
1-0563-605-B
30
14
15
17
16
10
11
13
8
9
12
29
26
7
25
24
23
22
21
28
27
20
4
2
1
5
6
3
19
18

Item	Part Number	Qty	Description	Comments
1	3637019M91	1	Kit, Crankshaft	
2		1	Crankshaft	(1) Not serviced,order REF.1
3	3637020M91	1	Kit, Bearing	[A] (1)
	3637021M91	X	Kit, Bearing	[A] Thickness (-)0.25MM
	3637022M91	X	Kit, Bearing	[A] Thickness (-)0.50MM
	3637023M91	X	Kit, Bearing	[A] Thickness (-)0.75MM
4	3637024M91	1	Kit, Bearing	[A] (1)
	3637025M91	X	Kit, Bearing	[A] Thickness (-)0.25MM
	3637026M91	X	Kit, Bearing	[A] Thickness (-)0.50MM
	3637027M91	X	Kit, Bearing	[A] Thickness (-)0.75MM
5	747128M1	2	Thrust Washer	(1)
	735742M1	X	Washer	Thickness (+)0.19MM
6	747129M1	2	Thrust Washer	(1)
	735743M1	X	Washer	Thickness (+)0.19MM
7	3637028M91	6	Kit, Conrod	
8		1	Rod	(7) Not serviced,order REF.7
9		1	Cap	(7) Not serviced,order REF.7
10	744971M1	1	Bush	(7)
11	4222485M1	2	Screw	(7) Replace and repair. Old not interchangeable with new 3637029M1
12	3637030M1	2	Nut	(7)
13	4222821M1	2	Sleeve	(7)
14	3640593M91	6	Kit, Piston	
15		1	Pin	(13) Not serviced,order REF.13
16	1476196X1	2	Circlip	(13) Not serviced,order REF.13
17		1	Piston	(13) Not serviced,order REF.13
18	748201M1	1	Gear	Number of teeth/spines 28
19	2196X	1	Key	
20	3638588M1	1	Pulley	
21	748315M1	1	Spacer	
22	1447128M1	1	Spacer	
23	742536M1	1	Thrust Plate	
24	1447207M1	1	O Ring	
25	748074M1	3	Screw	
26	11940X	1	Woodruff Key	
27	1476037M1	1	Damper	
28	3638589M1	1	Plate	
29	3638590M1	6	Screw	
30	3641316M91	6	Kit, Piston Ring	

FOOTNOTE [A] PRE-FINISHED

1-0563-611-A

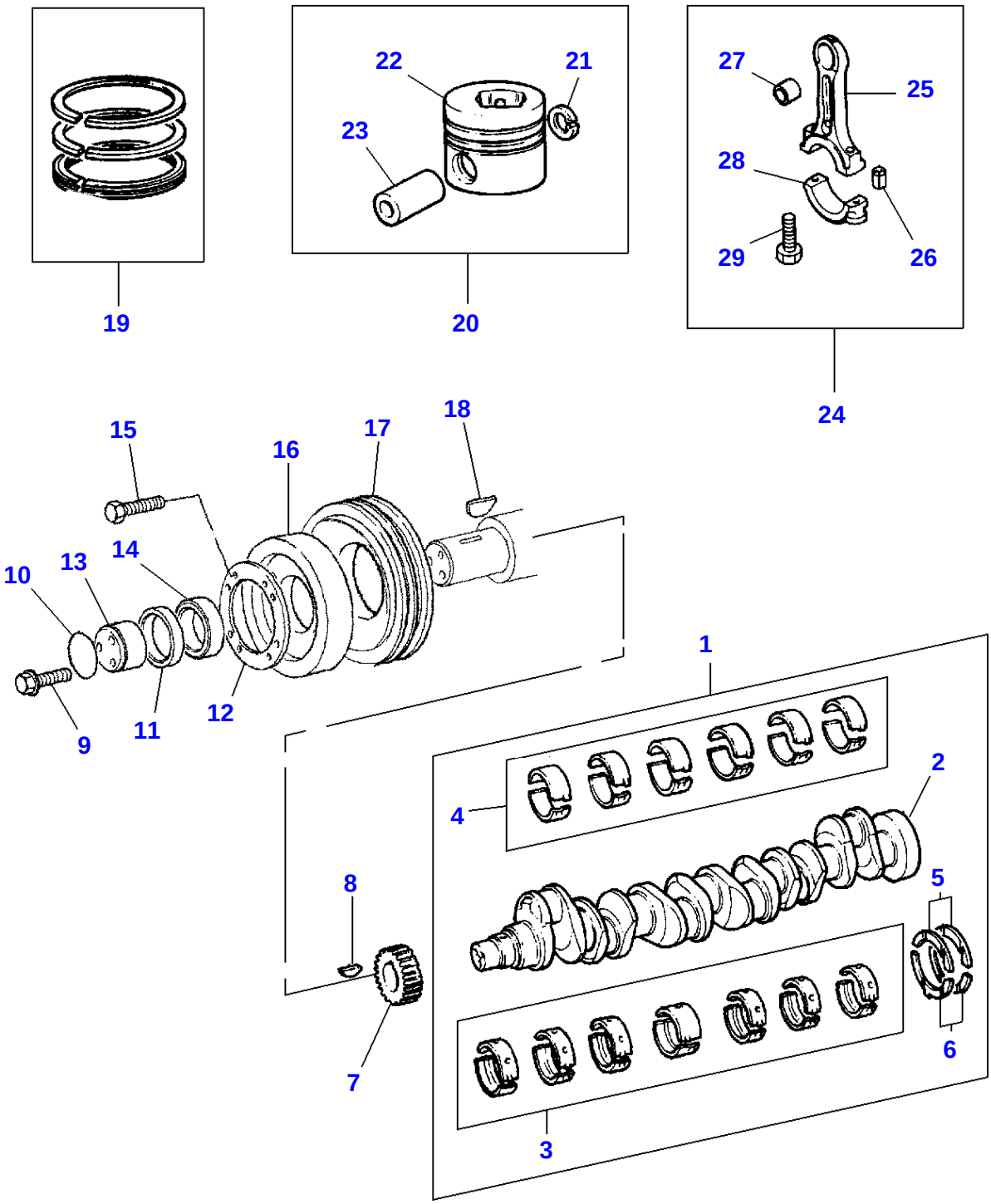

Item	Part Number	Qty	Description	Comments
1	3637019M91	1	Kit, Crankshaft	
2		1	Crankshaft	(1) Not serviced,order REF.1
3	3637020M91	1	Kit, Bearing	[A] (1)
	3637021M91	X	Kit, Bearing	[A] Thickness (-)0.25MM
	3637022M91	X	Kit, Bearing	[A] Thickness (-)0.50MM
	3637023M91	X	Kit, Bearing	[A] Thickness (-)0.75MM
4	3637024M91	1	Kit, Bearing	[A] (1)
	3637025M91	X	Kit, Bearing	[A] Thickness (-)0.25MM
	3637026M91	X	Kit, Bearing	[A] Thickness (-)0.50MM
	3637027M91	X	Kit, Bearing	[A] Thickness (-)0.75MM
5	747128M1	2	Thrust Washer	(1)
	735742M1	X	Washer	Thickness (+)0.19MM
6	747129M1	2	Thrust Washer	(1)
	735743M1	X	Washer	Thickness (+)0.19MM
7	748201M1	1	Gear	
8	2196X	1	Key	
9	748074M1	3	Screw	
10	1447207M1	1	O Ring	
11	1447128M1	1	Spacer	
12	3638589M1	1	Plate	
13	742536M1	1	Thrust Plate	
14	748315M1	1	Spacer	
15	3638590M1	6	Screw	
16	1476037M1	1	Damper	
17	3638588M1	1	Pulley	
18	11940X	1	Woodruff Key	
19	4222136M91	6	Kit, Piston Ring	
20	4222134M91	6	Kit, Piston	HIGH GRADE
	4222819M91	6	Kit, Piston	LOW GRADE
21	4222135M1	2	Circlip	(20)
22		1	Piston	(20) Not serviced,order REF. 20
23		1	Pin	(20) Not serviced,order REF. 20
24	4223522M91	6	Kit, Conrod	HIGH GRADE
	4223523M91	6	Kit, Conrod	LOW GRADE
25		1	Rod	(24) Not serviced,order REF. 24
26	4222133M1	2	Dowel	(24)
27	4222131M1	1	Bush	(24)
28		1	Cap	(24) Not serviced,order REF. 24
29	4222132M1	2	Screw	(24)

FOOTNOTE [A] PRE-FINISHED

1-0566-605-B

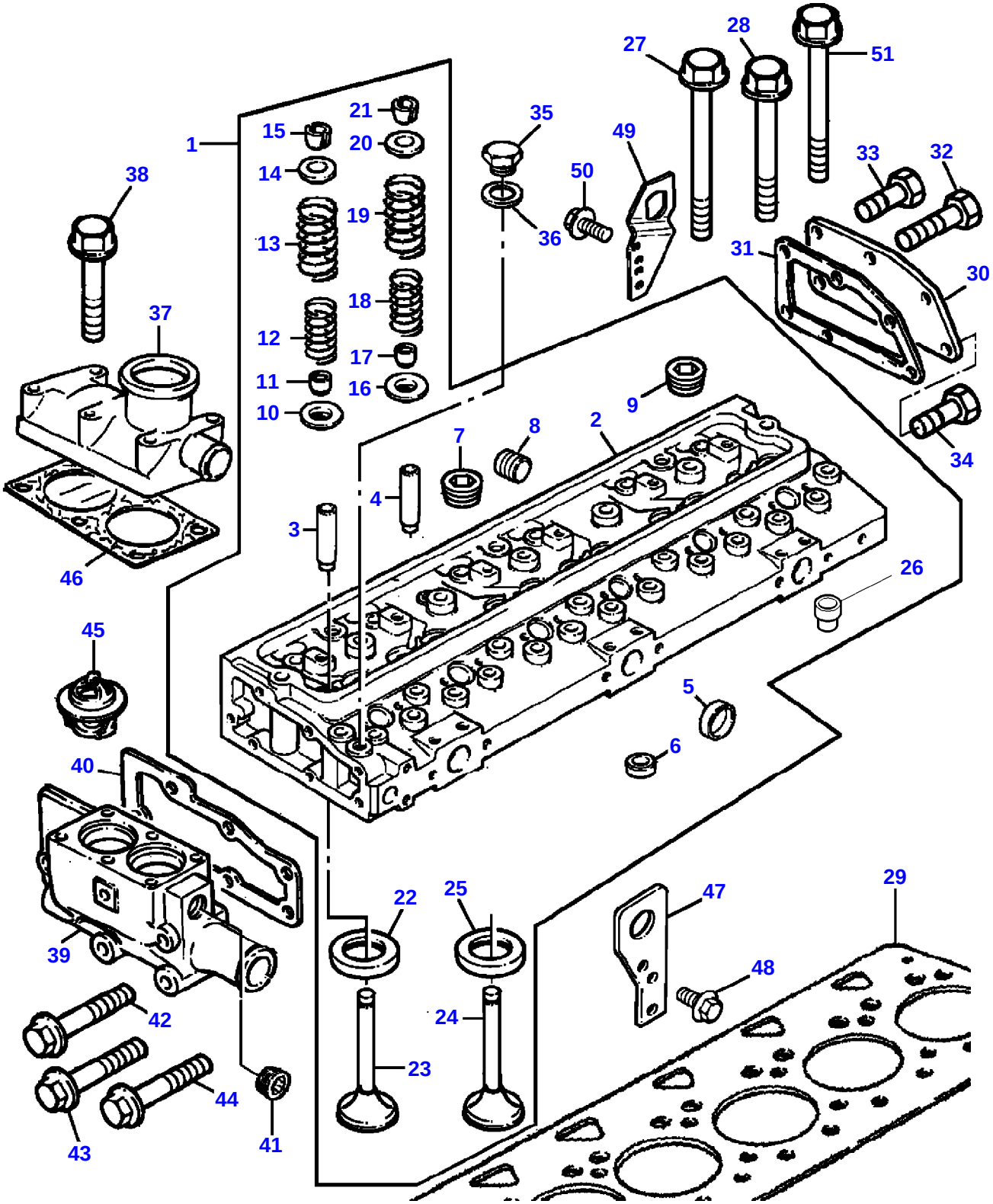
1
2
3
4
5
6
7
8
9
10
11
12
13
14
15
16
17
18
19
20
21
22
23
24
25
26
27
28
29
30
31
32
33
34
35
36
37
38
39
40
41
42
43
44
45
46
47
48
49
50
51

Item	Part Number	Qty	Description	Comments
1	**4222477M91**	1	Kit, Cyl. Head	Replace and repair. Old not interchangeable with new 3641804M91
2		1	Head	(1)
				Not serviced,order REF.1
3	4223073M1	6	Guide	(1)
				Replace and repair. Old not interchangeable with new 3640676M1
4	4223074M1	6	Guide	(1)
				Replace and repair. Old not interchangeable with new 748420M1
5	731354M1	3	Plug	(1)
6	746260M1	6	Plug	(1)
7	366947X1	1	Plug	[B]
				(1)
	376606X1	1	Plug	[C]
8	3637040M1	1	Plug	(1)
9	4224584M1	6	Plug	(1)
				Replace and repair. Old interchangeable with new 1476192X1
10	733824M1	6	Washer	(1)
11	3637041M1	6	Seal	(1)
12	740465M1	6	Spring	(1)
13	740467M1	6	Spring	(1)
14	740468M1	6	Cap	(1)
15	736453M1	12	Cotter	[A]
				(1)
16	733824M1	6	Washer	(1)
17	3637041M1	6	Seal	(1)
18	740465M1	6	Spring	(1)
19	740467M1	6	Spring	(1)
20	740468M1	6	Cap	(1)
21	736453M1	12	Cotter	[A]
				(1)
22	3640677M1	6	Insert	(1)
23	3640597M1	6	Valve Inlet	(1)
24	748309M1	6	Valve Exhaust	(1)
25	3640712M1	6	Insert	(1)
26	4222439M1	2	Dowel	(1)
27	745662M1	12	Screw	
28	745663M1	18	Screw	
29	4222354M1	1	Head Gasket	
30	4222343M1	1	Cover	
31	3638693M1	1	Joint	
32	3637011M1	3	Screw	
33	3637053M1	2	Screw	
34	3637011M1	1	Screw	
35	731410M1	1	Plug	
36	376178X1	1	Washer	
37	3637045M1	1	Connection	
38	3637046M1	6	Screw	
39	3641311M1	1	Housing	
40	3638702M1	1	Joint	
41	376606X1	2	Plug	
42	3637048M1	1	Screw	
43	3637046M1	2	Screw	
44	3637049M1	2	Screw	
45	1447384M1	2	Thermostat	
46	3638700M1	1	Joint	
47	3637050M1	1	Plate	
48	3637051M1	2	Screw	
49	3638411M1	1	Plate	
50	3637051M1	2	Screw	
51	1476243X1	2	Screw	

FOOTNOTE [A] SERVICED IN PAIRS
FOOTNOTE [B] REMOVE AND FIT 376606X1
FOOTNOTE [C] REPLACES PLUG SUPPLIED WITH CYLINDER HEAD ASSEMBLY

1-0566-611-C

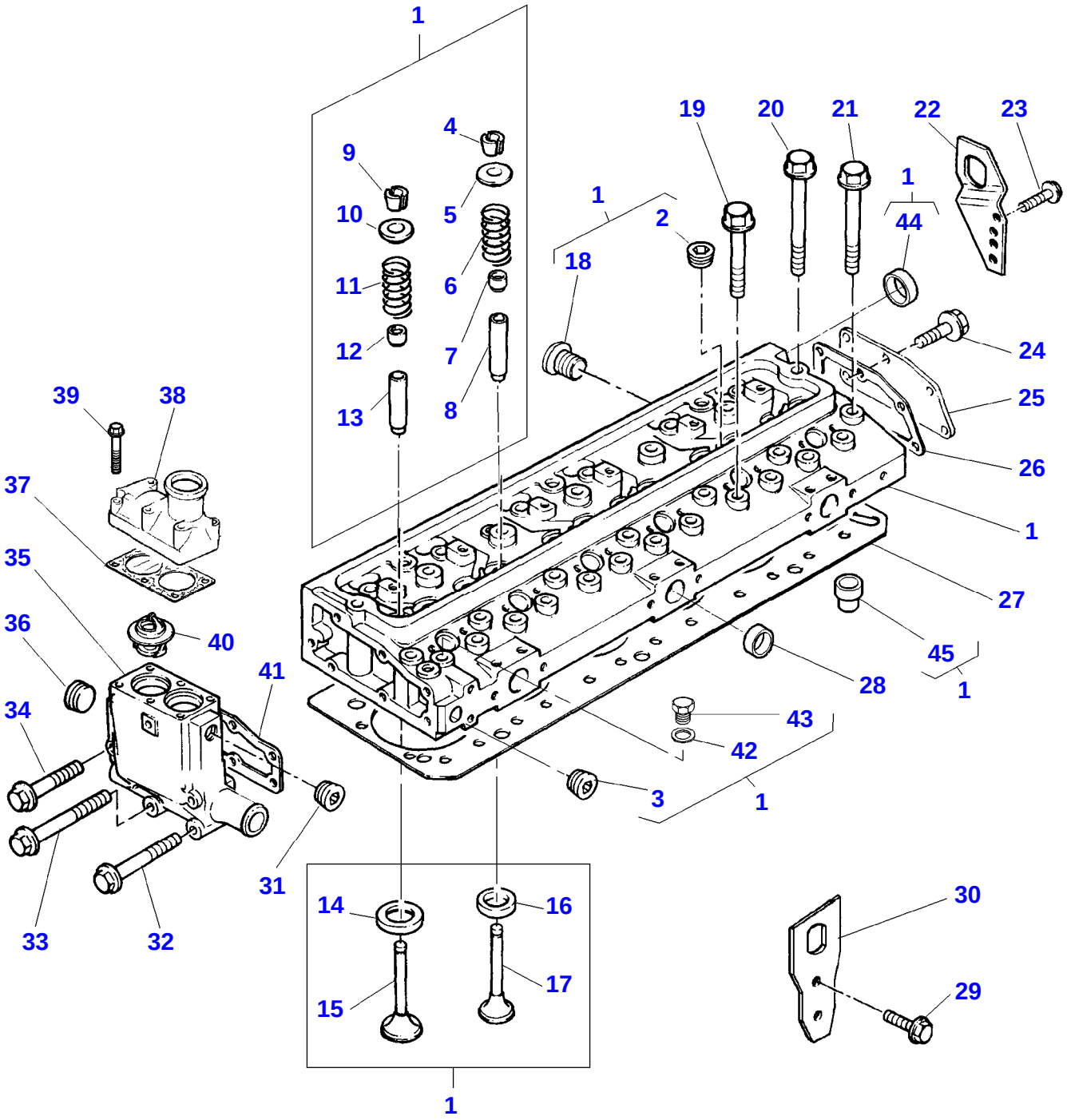
1
4
9
10
5
11
6
12
7
13
8
19
20
21
22
23
1
2
44
18
24
25
26
1
27
45
1
28
43
42
3
1
39
38
37
35
36
40
41
34
31
33
32
14
16
15
17
1
30
29

Item	Part Number	Qty	Description	Comments
1	4223430M91	1	Kit, Cyl. Head	Replace and repair. Old not interchangeable with new 4222145M91
2	4224584M1	6	Plug	(1)
				Replace and repair. Old interchangeable with new 1476192X1
3	376606X1	1	Plug	(1)
4	4222141M1	12	Cotter	[A]
				(1)
5	4222140M1	6	Cap	(1)
6	4222139M1	6	Spring	(1)
7	4222333M1	6	Oil Seal	(1)
				Replace and repair. Old not interchangeable with new 4222332M1
8	4223987M1	6	Guide	(1)
				Replace and repair. Old not interchangeable with new 4222954M1
9	4222141M1	12	Cotter	[A]
				(1)
10	4222140M1	6	Cap	(1)
11	4222139M1	6	Spring	(1)
12	4223442M1	6	Seal	(1)
				Replace and repair. Old not interchangeable with new 4222143M1
13	4223581M1	6	Valve Guide	(1)
14	4222148M1	6	Insert	(1)
15	4222149M91	6	Valve Inlet	(1)
16	4222146M1	6	Insert	(1)
17	4222147M91	6	Valve Exhaust	(1)
18	4222144M1	1	Plug	(1)
19	745662M1	12	Screw	
20	1476243X1	2	Screw	
21	745663M1	18	Screw	
22	4222170M1	1	Plate	
23	3637051M1	2	Screw	
24	3637044M1	3	Screw	
25	4222842M1	1	Cover	
26	4222155M1	1	Joint	
27	4222354M1	1	Head Gasket	Replace and repair. Old not interchangeable with new 3640916M1
28	731354M1	3	Plug	
29	3637051M1	2	Screw	
30	3637050M1	1	Plate	
31	376606X1	1	Plug	
32	3637048M1	1	Screw	
33	3637046M1	2	Screw	
34	3637049M1	2	Screw	
35	4223122M91	1	Therm. Housing	Replace and repair. Old not interchangeable with new 4222151M91
36		X	Not Used	
37	3638700M1	1	Joint	
38	3637045M1	1	Connection	
39	3637046M1	6	Screw	
40	1447384M1	2	Thermostat	
41	4222465M1	1	Gasket	
42	376178X1	1	Washer	(1)
43	731410M1	1	Plug	(1)
44	746259M1	1	Plug	(1)
45	4222439M1	2	Dowel	(1)

FOOTNOTE [A] SERVICED IN PAIRS

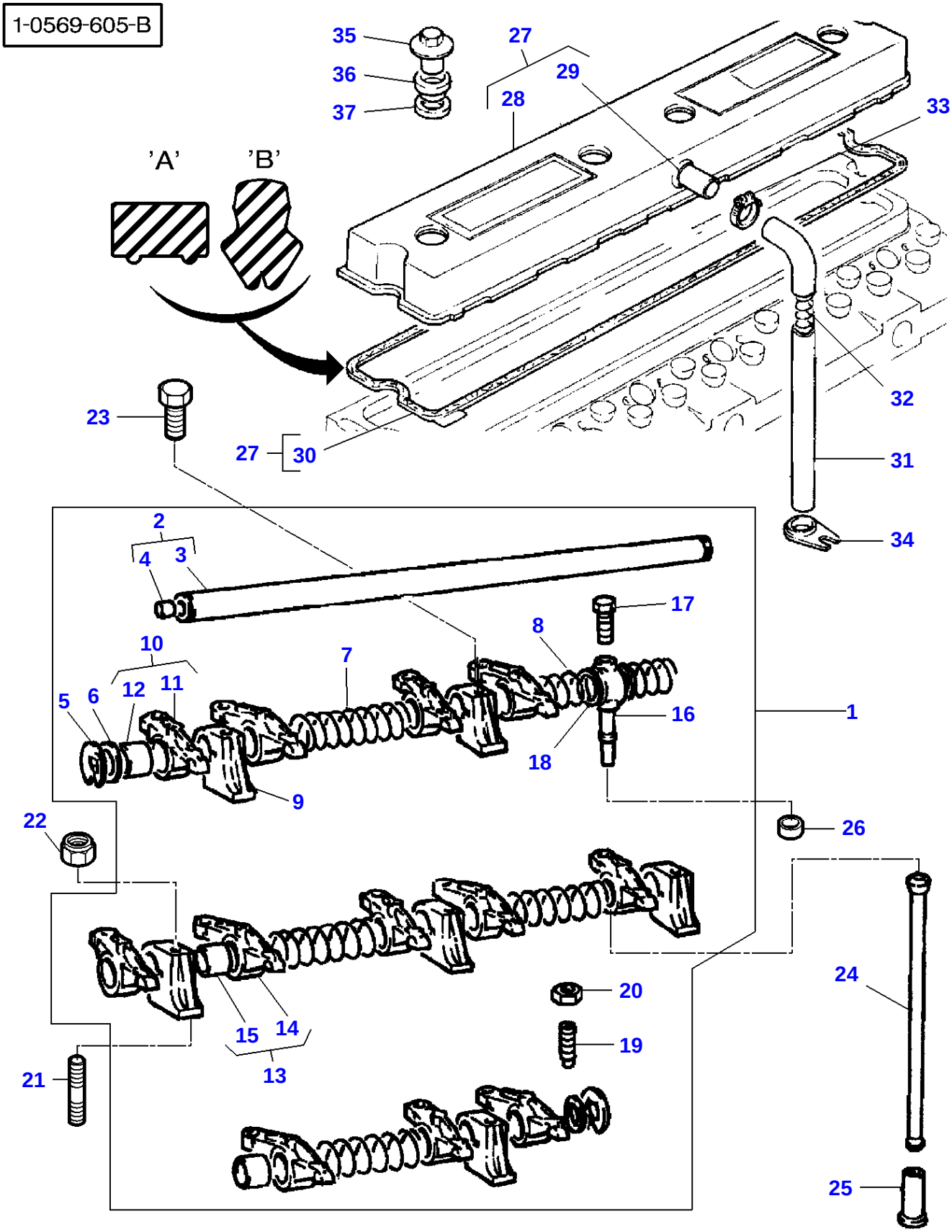
1-0569-605-B
35
36
37
27
29
28
33
'A'
'B'
32
23
27
30
31
34
2
4
3
17
8
10
7
5
6
12
11
16
1
18
9
22
26
24
20
15
14
19
13
21
25

Item	Part Number	Qty	Description	Comments
1	3637060M91	1	Rocker Shaft Ass	
2	3637062M91	1	Rocker Shaft	(1)
3		1	Shaft	(2)
				Not serviced,order REF.2
4	731330M1	2	Plug	(2)
5	376137X1	2	Circlip	(1)
6	747876M1	2	Washer	(1)
7	733811M1	4	Spring	(1)
8	733812M1	2	Spring	(1)
9	3638403M1	6	Bracket	(1)
10	4223075M91	6	Rocker	(1)
				Right Hand
				Replace and repair. Old not interchangeable with new 3641306M91
11		1	Lever	(10)
				Not serviced,order REF.10
12	895748M1	1	Bush	(10)
13	4223076M91	6	Rocker	(1)
				Left Hand
				Replace and repair. Old not interchangeable with new 3641247M1
14		1	Lever	(13)
				Not serviced,order REF.13
15	895748M1	1	Bush	(13)
16	3638499M1	1	Connection	(1)
17	3638500M1	1	Screw	
18	739513M91	2	Shim	(1)
19	4223933M1	12	Screw	(1)
20	376123X1	12	Nut	(1)
21	3637066M1	4	Stud	
22	3637067M1	4	Nut	
23	3637073M1	2	Screw	
24	733817M1	12	Rod	
25	4222069M1	12	Tappet	Replace and repair. Old not interchangeable with new 740671M1
26	**376525X1**	1	Olive	
27	3641896M1	1	Cover	Replace and repair. Old not interchangeable with new 3637069M91
28		1	Cover	(27)
				Not serviced,order REF.27
29	3638447M1	1	Connection	(27)
30	**748329M1**	1	Joint	'A'
	3641821M1	1	Joint	(27)
				'B'
31	740597M1	1	Pipe	
32	745540M1	1	Spring	
33	3641405M1	1	Hose Clip	Replace and repair. Old not interchangeable with new 3638598M1
34	745489M1	1	Bracket	
35	3637070M1	4	Nut	
36	3638640M1	4	Bush	
37	365691X1	4	Shim	

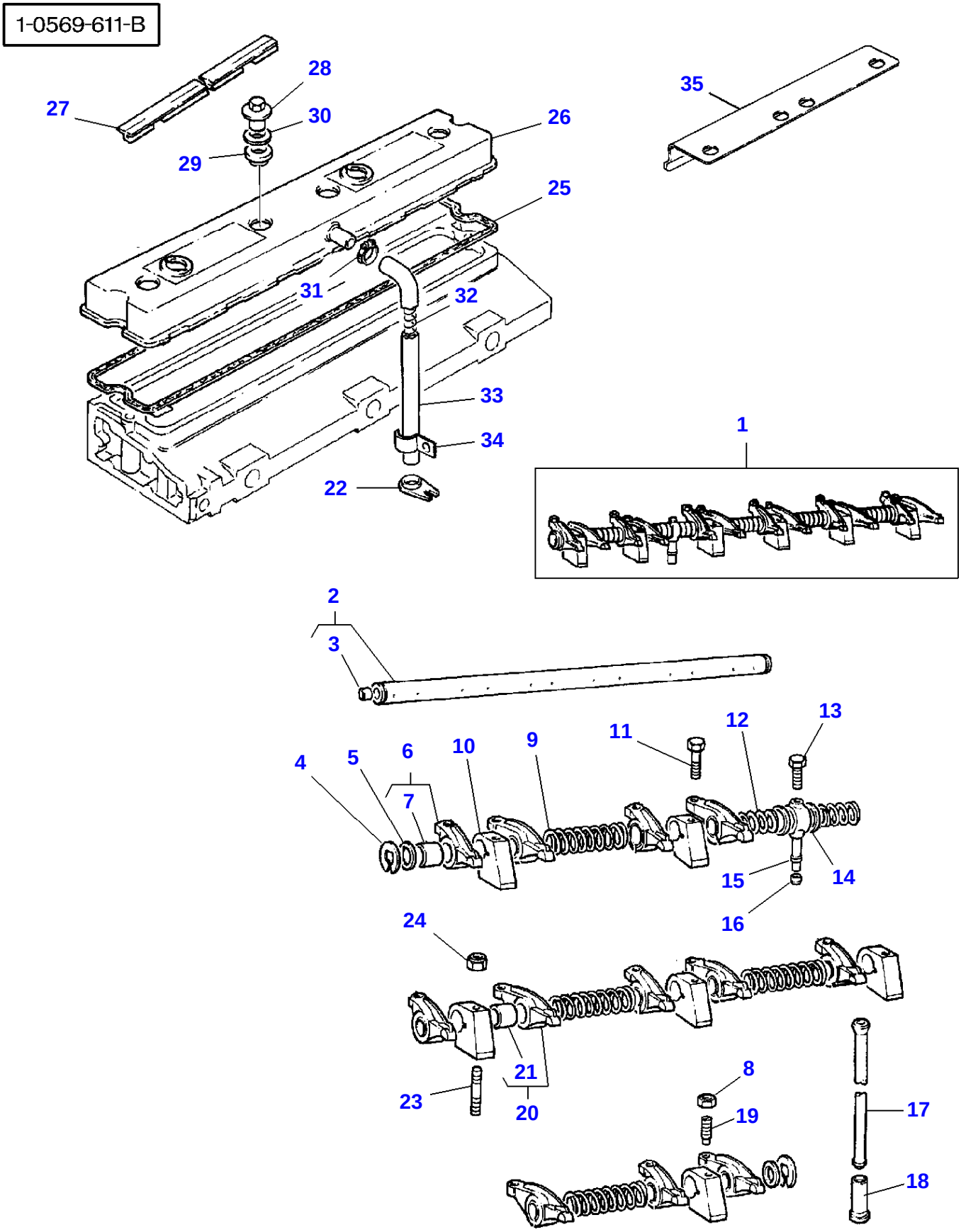
1-0569-611-B
27
28
30
29
26
25
35
31
32
33
34
22
1
2
3
4
5
6
7
10
9
11
12
13
15
14
16
24
21
20
23
8
19
17
18

Rocker Shaft - From Serial No F044009 United States only

Item	Part Number	Qty	Description	Comments
1	4222334M91	1	Rocker Shaft Ass	
2	4222335M91	1	Rocker Shaft	(1)
3	731330M1	2	Plug	(2)
4	376137X1	2	Circlip	(1)
5	4222156M1	2	Washer	(1)
6	4224543M1	6	Rocker	(1)
				Right Hand
				Replace and repair. Old interchangeable with new 4222157M1
7	4224553M1	1	Bush	(6)
				Replace and repair. Old not interchangeable with new 4222158M1
8	376123X1	12	Nut	(1)
9	733811M1	4	Spring	(1)
10	3638403M1	6	Bracket	(1)
11	3637073M1	2	Screw	
12	733812M1	2	Spring	(1)
13	3638500M1	1	Screw	(1)
14	739513M91	2	Shim	(1)
15	3638499M1	1	Connection	(1)
16	**376525X1**	1	Olive	
17	733817M1	12	Rod	
18	4222069M1	12	Tappet	
19	4223933M1	12	Screw	(1)
20	4224544M1	6	Rocker	(1)
				Left Hand
				Replace and repair. Old interchangeable with new 4222159M1
21	4224553M1	1	Bush	(20)
				Replace and repair. Old not interchangeable with new 4222158M1
22	745489M1	1	Bracket	
23	3637066M1	4	Stud	
24	3637067M1	4	Nut	
25	4222930M1	1	Joint	Replace and repair. Old not interchangeable with new 4222458M1
26	4223935M91	1	Cyl.Head Cover	Replace and repair. Old interchangeable with new 4223721M91
27	4222543M1	1	Heatshield	Replace and repair. Old not interchangeable with new 4222163M1
28	4223958M1	4	Nut	
29	3638640M1	4	Bush	
30	376656X1	4	Washer	
31	3641405M1	1	Hose Clip	
32	745540M1	1	Spring	
33	3641210M1	1	Hose	
34	740583M1	1	Clip	
35	4223723M91	1	Cover	

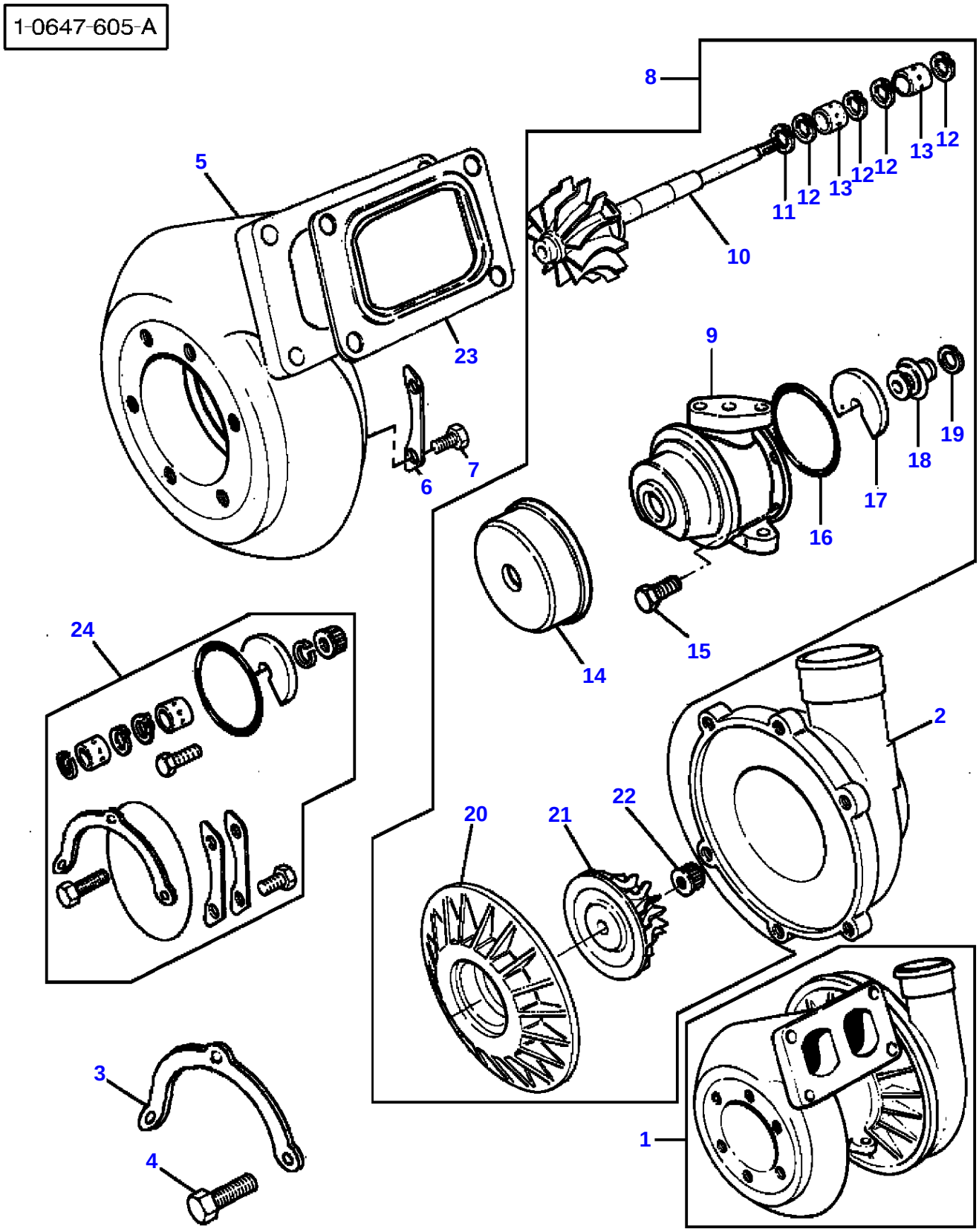
1-0647-605-A
8
5
11
12
13
12
12
13
12
10
23
9
19
18
7
6
17
16
24
15
14
2
22
20
21
3
1
4

Turbocharger - Up To No F044008 United States only

Item	Part Number	Qty	Description	Comments
1	3640539M91	1	Turbocharger	
2	3640720M1	1	Housing	(1)
3	3638451M1	2	Plate	[A] (1)
4	3638450M1	6	Bolt	[A] (1)
5	4222010M1	1	Housing	(1)
6	1896263M1	3	Clamp	[A] (1)
7	3640703M1	6	Bolt	[A] (1)
8	3640722M1	1	Rod End	(1)
9	3637133M91	1	Housing	(8)
10	3640723M1	1	Turbine	(8)
11	3638388M1	1	Piston Ring	[A] (8)
12	1896253M1	4	Ring	[A] (8)
13	3638048M1	2	Bearing	[A] (8)
14	1896255M1	1	Shroud	[A] (8)
15	3640708M1	4	Bolt	[A] (8)
16	1896248M1	1	Seal	[A] (8)
17	3640695M1	1	Bearing Thrust	[A] (8)
18	3640709M1	1	Collar	(8)
19	1896249M1	1	Ring	[A] (8)
20	3638276M1	1	Plate	[A] (8)
21	3638285M1	1	Impeller	(8)
22	3638041M1	1	Nut	[A] (8)
23	3638274M1	1	Joint	
24	**3640724M91**	X	Kit, Repair	

FOOTNOTE [A] ALSO INCLUDED IN REPAIR KIT.

1-0647-611-A

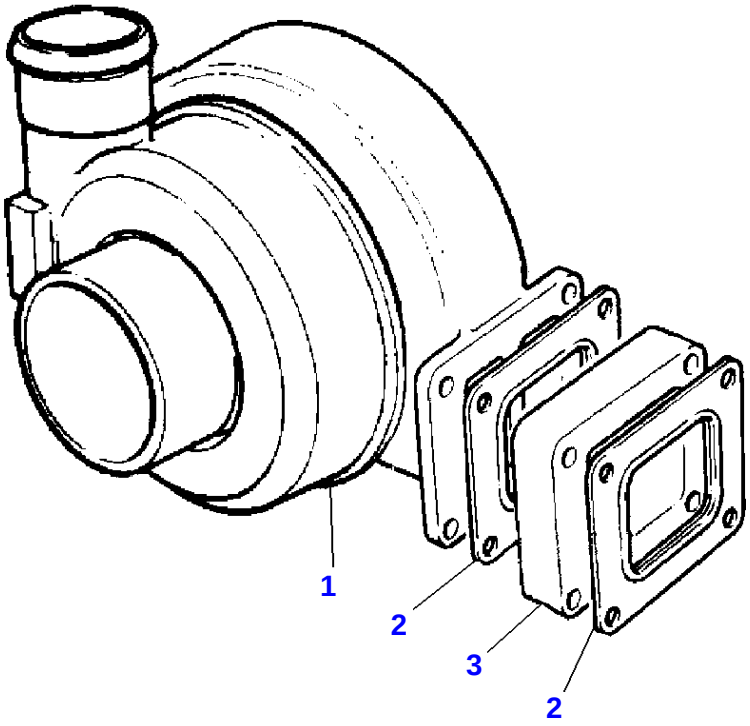

Turbocharger - From Serial No F044009 United States only

Item	Part Number	Qty	Description	Comments
1	4222246M91	1	Turbocharger	[A]
2	4222247M1	2	Joint	
3	4222248M1	1	Spacer	

FOOTNOTE [A] DETAILS TO BE ADVISED

1-0648-605-A

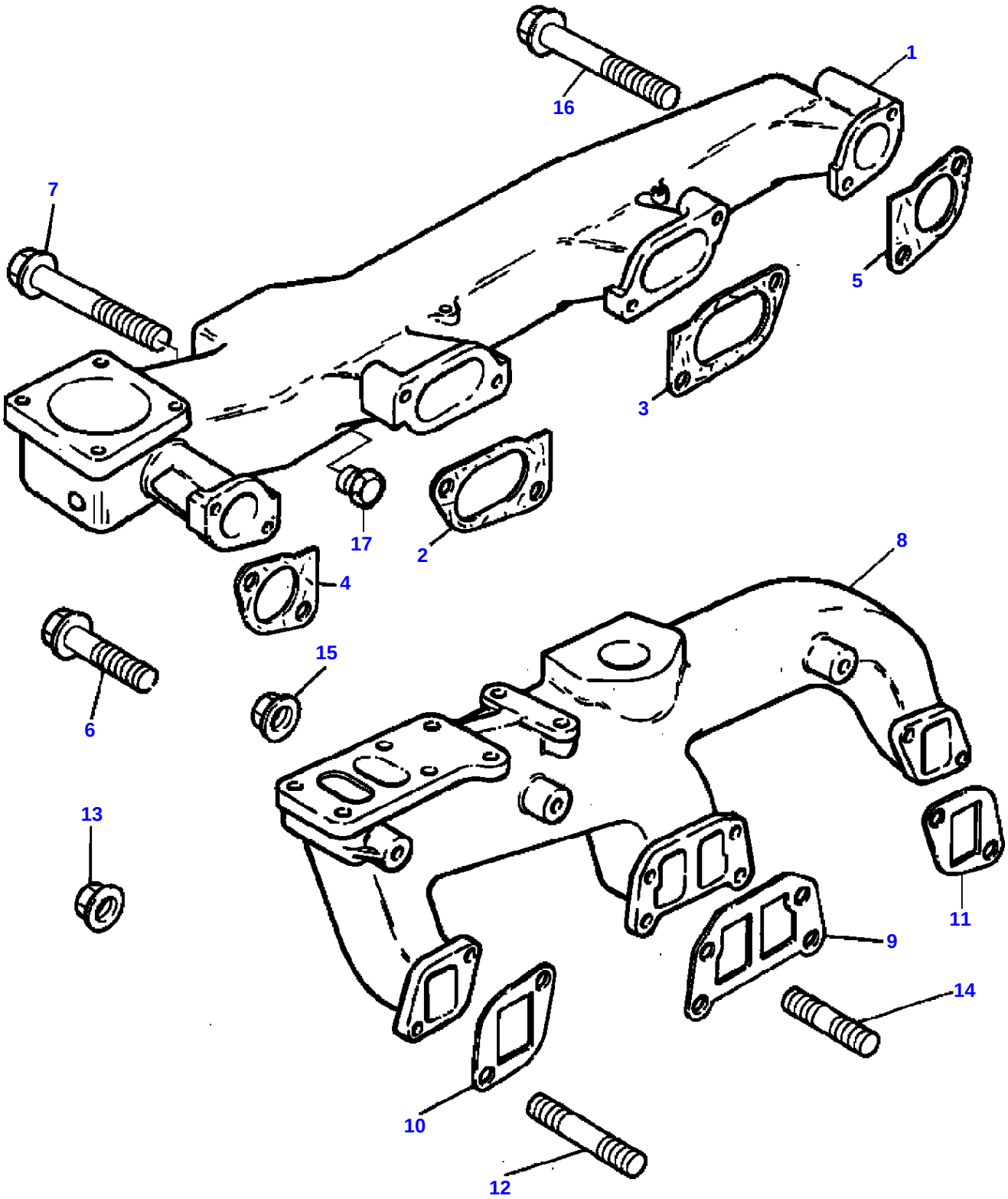

Turbocharger - Inlet And Exhaust Manifold - Up To No F044008 United States only

Item	Part Number	Qty	Description	Comments
1	3637103M1	1	Manifold	Up to Serial or Engine Number 31/12/94
	4222046M1	1	Ind.Manifold	From Serial or Engine Number 01/01/95
2	744158M1	1	Joint	
3	744158M1	1	Joint	
4	744159M1	1	Joint	
5	744159M1	1	Joint	
6	3637104M1	2	Screw	
7	3637105M1	5	Screw	
8	4222047M1	1	Exhaust Manifold	Replace and repair. Old not interchangeable with new 3638257M1
9	3638258M1	1	Joint	
10	744162M1	1	Gasket	
11	744162M1	1	Gasket	
12	3637107M1	4	Stud	
13	3637108M1	4	Nut	
14	1476290X1	4	Stud	
15	3637108M1	4	Nut	
16	3637109M1	1	Screw	
17	731818M1	1	Plug	

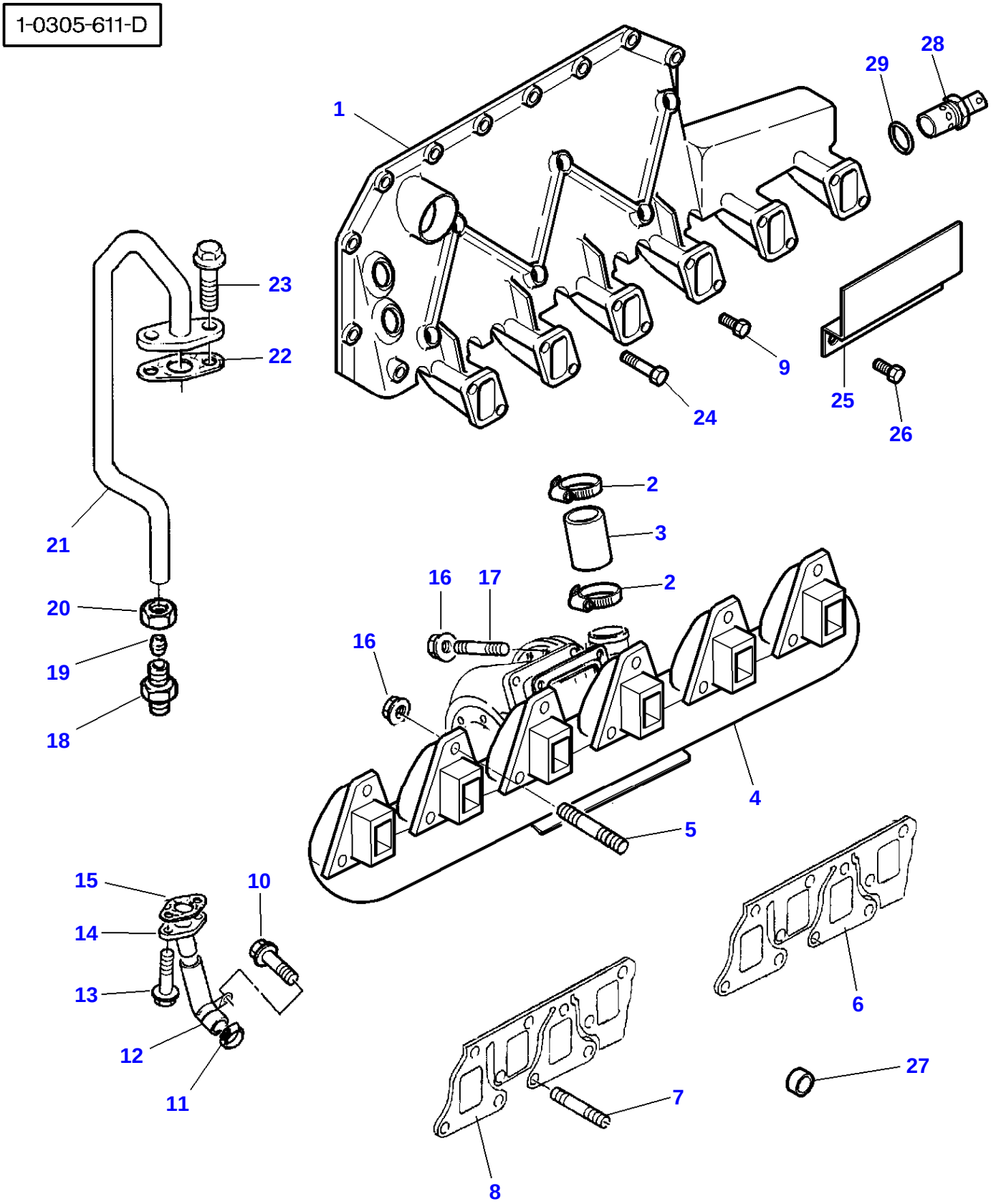
1-0305-611-D
1
2
3
2
4
5
6
7
8
9
10
11
12
13
14
15
16
16
17
18
19
20
21
22
23
24
25
26
27
28
29

BUY NOW

PayPal VISA MasterCard DISCOVER AMERICAN EXPRESS

Download the full PDF manual instantly.

Our customer service e-mail:

aservicemanualpdf@yahoo.com